CLASS

XII

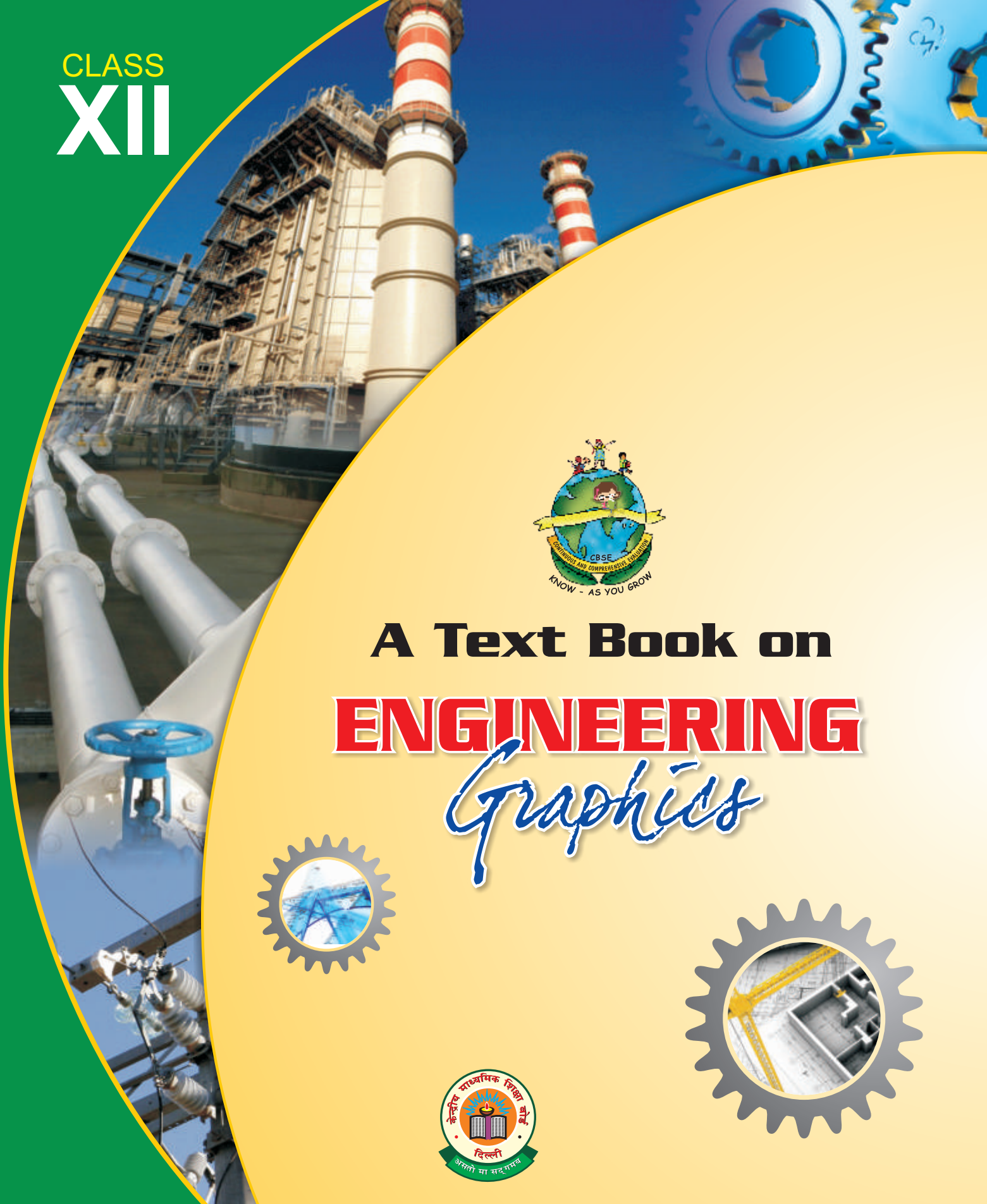

CBSE
CONTINUOUS AND COMPREHENSIVE EVALUATION
KNOW - AS YOU GROW

A Text Book on

ENGINEERING *Graphics*

केन्द्रीय माध्यमिक शिक्षा बोर्ड
दिल्ली
असतो मा सद्गमय

CENTRAL BOARD OF SECONDARY EDUCATION

Shiksha Kendra, 2, Community Centre, Preet Vihar, Delhi-110 092 India

नया आगाज़

आज समय की माँग पर
आगाज़ नया इक होगा
निरंतर योग्यता के निर्णय से
परिणाम आकलन होगा।

परिवर्तन नियम जीवन का
नियम अब नया बनेगा
अब परिणामों के भय से
नहीं बालक कोई डरेगा

निरंतर योग्यता के निर्णय से
परिणाम आकलन होगा।

बदले शिक्षा का स्वरूप
नई खिले आशा की धूप
अब किसी कोमल-से मन पर
कोई बोझ न होगा

निरंतर योग्यता के निर्णय से
परिणाम आकलन होगा।
नई राह पर चलकर मंज़िल को हमें पाना है
इस नए प्रयास को हमने सफल बनाना है
बेहतर शिक्षा से बदले देश, ऐसे इसे अपनाए
शिक्षक, शिक्षा और शिक्षित
बस आगे बढते जाएँ
बस आगे बढते जाएँ
बस आगे बढते जाएँ.....

CBSE
CONTINUOUS AND COMPREHENSIVE EVALUATION
KNOW - AS YOU GROW

A Text Book on

ENGINEERING Graphics

CLASS XII

CENTRAL BOARD OF SECONDARY EDUCATION
Shiksha Kendra, 2, Community Centre, Preet Vihar, Delhi-110 092 India

A text book on Engineering Graphics, Class XII.

PRICE : Rs.

FIRST EDITION 2010 CBSE, India

COPIES:

"This book or part thereof may not be reproduced by any person or agency in any manner."

PUBLISHED BY : The Secretary, Central Board of Secondary Education, Shiksha Kendra, 2, Community Centre, Preet Vihar, Delhi-110092

DESIGN, LAYOUT : Multi Graphics, 5745/81, Reghar Pura, Karol Bagh, New Delhi-110005, Phone : 25783846

PRINTED BY :

FOREWORD

Design is an integral aspect of the world around us. Every day, we are inundated with images of current generation products such as automobiles, air crafts, and so on. Design is crucial to each of these products.

Engineering Graphics is the language of communication for all engineers, architects, interior decorators, apparel designers and many others. This is needed right from conceiving the design of any product, upto the mass production stage and beyond for modification and restructuring of Engineering Graphics finds its use in all fields work relating to various products and their design.

As a first attempt, CBSE has prepared the text book for Class XI in Engineering Graphics which has been published in June, 2010. Through Class XI text book you have already gained an insight into the fundamentals of the subject Engineering Graphics.

In this book for class XII, you will learn about the representation of objects, such as simple geometrical solids, simple machine blocks, in three dimension form i.e. Isometric Projections of solids.

You will also begin to look afresh at the nature and function of several ordinary household engineering hardware such as nuts, bolts, screws, washers, rivets etc. that are essential to make a household run.

In addition, you will learn to assemble the various simple machine blocks correctly in order to form a functional machine of appropriate use for household purposes or for industry.

I would like to place on record my deep appreciation for all the subject experts and practicing teachers who have put in their sincere efforts in the development of this textbook. Appreciation is also due to Shri Shashi Bhushan, Director (Academics) & Dr. (Smt.) Srijata Das, Education Officer for planning and execution of the work and bringing out this publication.

It is hoped that students and teachers will benefit by making the best use of these text books. Suggestions from the users for further improvement of these textbooks will be highly appreciated.

VINEET JOSHI
CHAIRMAN

भारत का संविधान

उद्देशिका

हम, भारत के लोग, भारत को एक '[म्पर्ण पभुत्व-स्रंपन्न समाजवाद पंथनिरपेक्ष लोकतंत्रात्मक गणराज्य] बन न के लिए, तथा उ के समस्त नागरिकों को:

सामाजिक, आर्थिक और राजनतिक न्याय,
विचार, अभिव्यक्ति, वि वास, धर्म
और उ सना की स्वतंत्रता,
पतिष्ठा और अव र की समता

प्राप्त कराने के लिए, तथा उ सब में, व्यक्ति की ग रमा और [ाष्ट्र की एकता और अ ण्डता] सुनिश्चित करने वाली बंधुता बढ़ाने के लिए दृढ़संकल्प होकर अपनी इस संविधान सभा में अ ज तारीख 26 नवम्बर, 1949 ई॰ को एतदद्वारा इ स संविधान को अंगीकृत, अ धनि मित और अ त्मार्पित करते हैं।

1. संविधान (यालीसवां संशोधन अ धनियम, 1976 की धारा 2 द्वारा (.1.1977) से "भुत्व-संप न लोकतंत्रात्मक गणराज्य" के स्थान प पतिस्थापि । न
2. संविधान (यालीसवां संशोधन अ धनियम, 1976 की धारा 2 द्वारा (.1.1977 से) " ाष्ट्र की एकता" के स्थान प पतिस्थापि । त

भाग 4 क

मूल कर्त्तव्य ।

5 क. मूल कर्त्तव्य – भारत के प्रत्येक नागरिक का यह कर्त्तव्य ह ेगा कि वह –

(क) संविधान का पालन करे और उसके आद र्शों, संस्थाओं, राष्ट्रध्वज और राष्ट्रगान का आद करे; र

(ख) स्वतंत्रता के लिए हमारे राष्ट्रीय आंद ेलन को प्रेरित करने वाल उच्च आद र्शों को हृद में संजोए रख े और उसका पाल करे; न

(ग) भारत की प्रभुता, एकता और अखंड ा की रक्षा करे और उसे अक्षुण्ण रख े; ।

(घ) दश की रक्षा करे और आह्वान किए जाने पर राष्ट्र की सेवा करे;

(ङ) भारत के सभी लोगों में समरसता और समान भ्रातृत्व की भावना का निर्माण करे जो धर्म, भाषा और प्रदश या वर्ग पर आधारित सभी भेद ाव से परे ह ों, ऐसी प्रथाओं का त्याग करे जो स्त्रियों के सम्मा को विरु ह ं; द्ध

(च) हमारी सामासिक संस्कृति की गौरवशाली परंपरा का मह व समझे और उसका परीक्षण करे;

(छ) प्राकृतिक पर्यावरण की जिसके अंतर्गत वन, झील, नद , और वन्य जीव ह ं, रक्षा करे और उसका संवर्धन करे तथा प्राणिमात्र के प्रति द ाभाव रख े; ।

(ज) वैज्ञानिक दृष्टिकोण, मानववाद और ज्ञ नार्जन तथा सुधार की भा ना का विकास करे;

(झ) सार्वजनिक संपत्ति को सुरक्षित रख े और हिंसा से दूर रह;

(ञ) व्यक्तिगत और सामूहिक गतिविधियों के सभी क्षेत्रों में उत्कर्ष की ओर बढ़ने का सतत प्रयास करे जिससे राष्ट्र निरंतर बढ़ते हुए प्रयत्न और उपलब्धि की नई उंचाइयों को छू ले।

THE CONSTITUTION OF INDIA

PREAMBLE

WE, THE PEOPLE OF INDIA, having solemnly resolved to constitute India into a [1] **SOVEREIGN SOCIALIST SECULAR DEMOCRATIC REPUBLIC** and to secure to all its citizens :

JUSTICE, social, economic and political;

LIBERTY of thought, expression, belief, faith and worship;

EQUALITY of status and of opportunity; and to promote among them all

FRATERNITY assuring the dignity of the individual and the [2] [unity and integrity of the Nation];

IN OUR CONSTITUENT ASSEMBLY this twenty-sixth day of November, 1949, do **HEREBY TO OURSELVES THIS CONSTITUTION.**

1. Subs, by the Constitution (Forty-Second Amendment) Act. 1976, sec. 2, for "Sovereign Democratic Republic (w.e.f. 3.1.1977)
2. Subs, by the Constitution (Forty-Second Amendment) Act. 1976, sec. 2, for "unity of the Nation (w.e.f. 3.1.1977)

THE CONSTITUTION OF INDIA

Chapter IV A

Fundamental Duties

ARTICLE 51A

Fundamental Duties - It shall be the duty of every citizen of India-

(a) to abide by the Constitution and respect its ideals and institutions, the National Flag and the National Anthem;

(b) to cherish and follow the noble ideals which inspired our national struggle for freedom;

(c) to uphold and protect the sovereignty, unity and integrity of India;

(d) to defend the country and render national service when called upon to do so;

(e) To promote harmony and the spirit of common brotherhood amongst all the people of India transcending religious, linguistic and regional or sectional diversities; to renounce practices derogatory to the dignity of women;

(f) to value and preserve the rich heritage of our composite culture;

(g) to protect and improve the natural environment including forests, lakes, rivers, wild life and to have compassion for living creatures;

(h) to develop the scientific temper, humanism and the spirit of inquiry and reform;

(i) to safeguard public property and to abjure violence;

(j) to strive towards excellence in all spheres of individual and collective activity so that the nation constantly rises to higher levels of endeavour and achievement.

ACKNOWLEDGEMENTS

CBSE ADVISORS

- Shri Vineet Joshi, Chairman, CBSE
- Smt. Chitralekha Gurumurthy, Director (Academics)

CONVENOR

- Dr. R.P. Chaurisiya, Former Vice Principal, Bharatiya Vidya Bhavan, K.G. Marg, New Delhi-110001

EDITING TEAM

- Dr. R.P. Chaurisiya, Former Vice Principal, Bharatiya Vidya Bhavan, K.G. Marg, New Delhi-110001
- Mr. Amrit Pal Singh, Dy. Director Power Training Institute, Badarpur, New Delhi.

DEVELOPMENT TEAM

- Dr. S.M. Kapur, Former HOS, Mukherjee Memorial Sr. Secondary School, Shadara, Delhi
- Sh. Arvind Kr. Singh Chauhan, PGT, Modern School, Vasant Vihar, New Delhi.
- Smt. G.M. Prema, PGT, Shyama Prasad Vidyalaya, Lodi Estate, New Delhi.
- Sh. Hitesh Gupta, PGT, G.B. Pant Sarvodaya Bal Vidyalaya, Srinivas Puri, New Delhi.
- Smt. Soumya, PGT, Delhi Kannada Sr. Sec. School, Lodi Estate, New Delhi.
- Sh. Surajit Chatterjee, Bal Bharati Public School, Ganga Ram Hospital Marg, New Delhi
- Mr. Pawan Amrut Kumar, Graphics Developer, NIC, New Delhi.

MEMBER COORDINATOR

- Dr. Srijata Das, Education Officer, CBSE, Delhi

CONTENTS

CHAPTER 1 — ISOMETRIC PROJECTION 1

CHAPTER 2 — MACHINE DRAWING 40

CHAPTER 3 — BEARINGS 87

CHAPTER 4 — ROD JOINTS 108

CHAPTER 5 — TIE-ROD AND PIPE JOINTS 135

CHAPTER 6 — SHAFT COUPLINGS 150

CHAPTER 7 — PULLEYS 165

CBSE

CONTINUOUS AND COMPREHENSIVE EVALUATION

KNOW - AS YOU GROW

CHAPTER 1

ISOMETRIC PROJECTION

1.1 INTRODUCTION

The objects we look, around us, are in 3-Dimensional form. When we try to communicate the structure of objects to others then we take the help of pictures / pictorial drawings. These pictorial drawings are 'one plane' drawings because our mode of communication is paper which has only two dimensions and these drawings show the object approximately as it appears to the viewer.

In engineering, one plane drawings are extensively used in addition to the orthographic views of an object to give the best understanding. So the practice of drawing the objects in one plane, pictorial view, from the orthographic views is essential. There are three methods to draw the pictorial drawings i.e.

1. Perspective Projection
2. Oblique Projection
3. Axonometric Projection

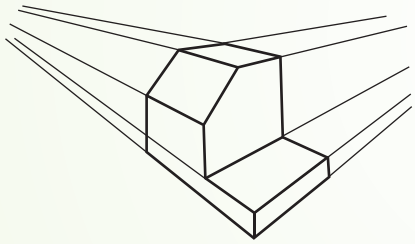

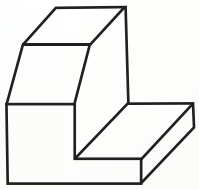

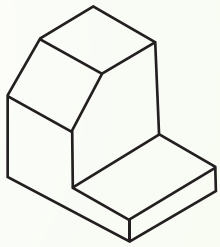

Perspective projection is mostly used by the artists, professional designers and architects to show the views as it appears to the human eye. It appears to converge at a point, called vanishing point. The ***Oblique projection*** is mostly used by the mathematicians and furniture manufacturers. They impart third dimension at an angle to the two dimensional images, to show the depth. The ***Axonometric projection*** differs from the other one plane views on the basis of rotation angle along one or more of its axes relative to the plane of projection. It is extensively used in mechanical engineering to show the blocks, machine parts, assemblies etc. It shows an image of an object from a skew direction.

On the basis of inclination angle of the three principal axes to the plane of projection, the axonometric projection is classified among, isometric projection, diametric projection and trimetric projection.In isometric projection, all the angles between principal axes are equal while in diametric projection, only two angles between three principal axes are equal and over 90°and in trimetric projection, all the three angles are unequal and not less than 90°. As the principal axes are inclined to the plane of projection so the measurement along them are also foreshortened. But the most advantageous point of isometric projection is that it needs a single scale to measure along each of the three axes. So in general, we use only isometric projection in engineering practice.

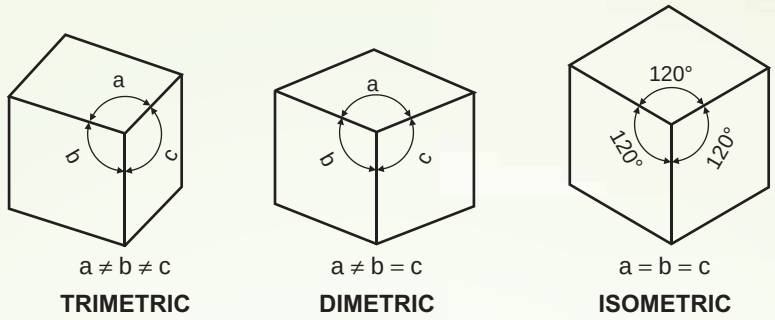

Fig 1.1 Types of Axonometric Projections

1.2 ISOMETRIC PROJECTION

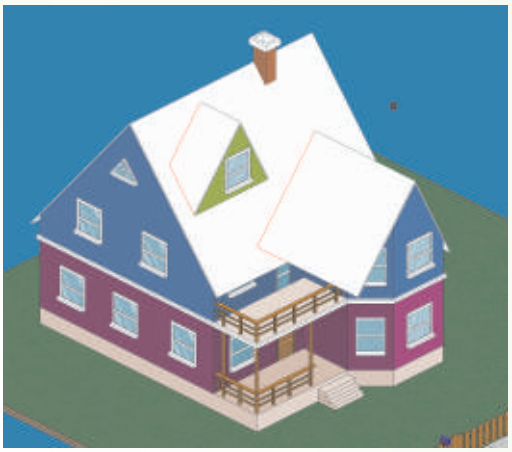

The isometric projection of an object is a one plane view drawn with the object so placed with respect to the plane of projection that all the three principal axes appear to be inclined to each other at an equal angle of 120°.

1.2.1 ISOMETRIC SCALE

The isometric scale is used to measure the foreshortened length of dimensions of any object to draw the isometric projection. The steps of construction of isometric scale are given below ; refer Fig. 1.2

(i) Draw a horizontal line PQ.

(ii) Draw the true lengths on a line PM inclined at 45° to the horizontal line (say up to 70 mm)

(iii) Draw another line PA at 30° to the horizontal line.

(iv) Draw the vertical projection of all the points of true length from PM to PA.

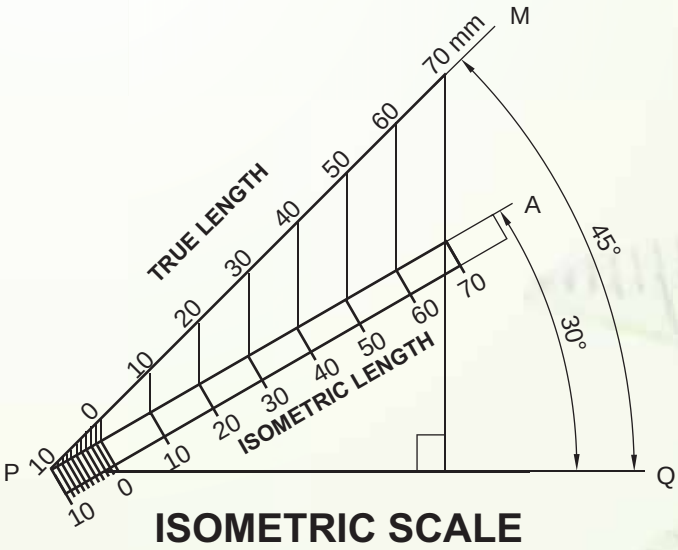

Fig 1.2

(v) Complete the scale with the details as shown in the figure.

The lengths shown at the line PA are the isometric lengths to be used to draw the isometric projection.

1.2.2 POSITIONING OF SOLID

The solids are mostly drawn by placing them as per their specific position with respect to vertical plane (V.P.) and horizontal plane (H.P.), as discussed earlier in orthographic projections. If not specified then they are drawn by placement in such a position which describes the shape of the object in best manner. Here after drawing the isometric projection we can observe the two planes i.e. vertical plane and profile plane on two sides of the object, so to specify the direction of viewing we mark an arrow towards the assumed Front of object as per conditions.

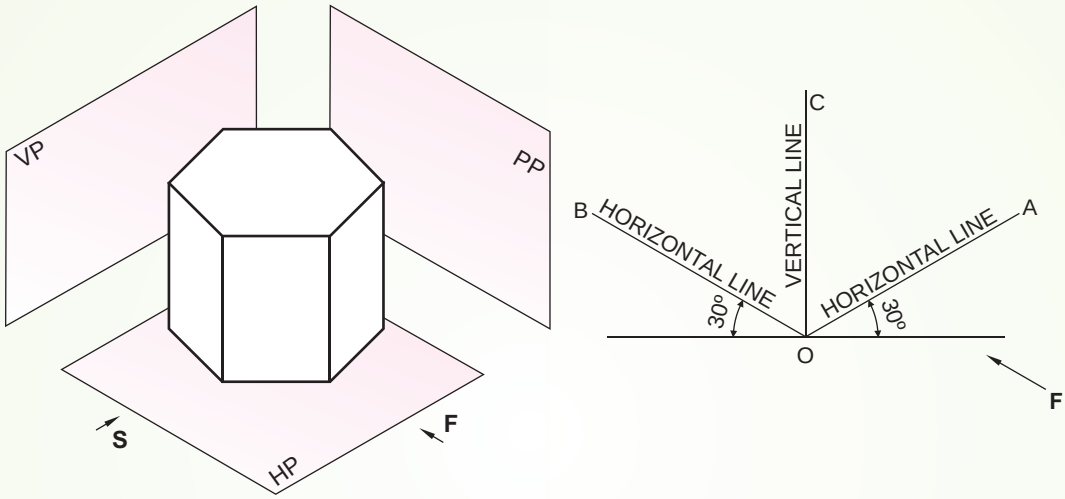

Fig 1.3

1.2.3 STEPS TO DRAW THE ISOMETRIC PROJECTION

1. Draw the base of the solid "with isometric scale" as per specified condition with respect to V.P. and H.P. as per the rules of orthographic projection. It is called Helping Figure.
2. Draw the centre of the helping figure and enclose the helping figure in a suitable rectangle. Transfer the co-ordinates of centre to the sides of the enclosing rectangle with centre lines.
3. Draw the three principal axes at 30°, 90° and 30° to the horizontal base line.
4. Copy the length of sides of helping figure's rectangle on the respective principal axis and the height or length of the object on the third principal axis. It will give a box in which the object will be perfectly/snugly fitted.
5. Copy the co-ordinates of centre and the vertices of the base on this box.
6. Join the visible edges by thick lines and Axis line by the centre line.
7. Complete the isometric projection with dimensioning and direction of viewing.

Now let us draw the isometric projection of regular solids.

1.3 DRAWING OF ISOMETRIC PROJECTION

The isometric projection of different solids is drawn by keeping the three principal axis at 120° to each other. The solids are drawn as per the specified condition with respect to V.P. and H.P. In earlier class we have studied to draw the isometric projection of two dimensional laminae of regular shapes. Here we will study to draw the isometric projection of single regular solids and combination of two solids. As per the characteristics of regular solids, we can classify them as follows:-

(i) Prisms

(ii) Pyramids

(iii) Cylinder and Cone

(iv) Frustum of Pyramids

(v) Sphere and Hemisphere

1.3.1 PRISMS

Prisms are the solids with two bases and rectangular faces. They can be kept horizontal by resting on face or Vertical by resting on base. Let us consider some examples to understand it better.

Example 1: A hexagonal prism of base side 30 mm and height of 70 mm resting on its base on H.P. with two of its base side parallel to V.P.

Solution : Refer Fig. 1.4

Steps (i) Draw the hexagon with isometric length of 30 mm.

(ii) Complete the helping figure by enclosing hexagon in snugly fitted rectangle and centre lines of hexagon.

(iii) Draw the isometric box with OA length at the side of direction of viewing, OB length at the opposite side and OC equal to 70mm, is length of height of prism on vertical line.

(iv) Copy all the points of hexagon and centre on the box.

(v) Join the visible edges by thick lines and axis by centre lines.

(vi) Complete the isometric projection of hexagonal prism with dimensioning and direction of viewing.

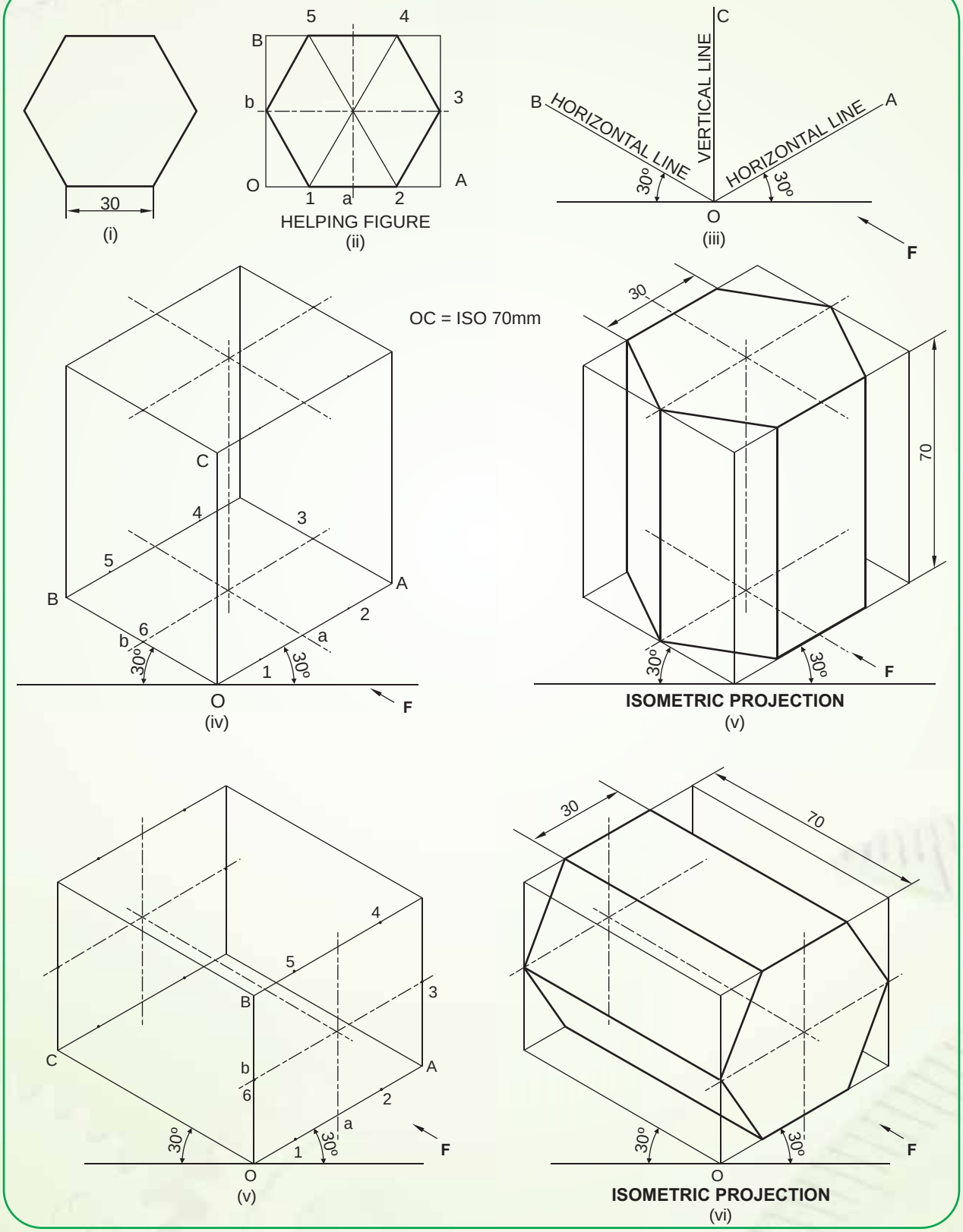
30
(i)
5
4
B
b
3
O
A
1
a
2
HELPING FIGURE
(ii)
C
VERTICAL LINE
B
HORIZONTAL LINE
HORIZONTAL LINE
A
30°
30°
O
(iii)
F
OC = ISO 70mm
C
4
3
5
B
A
2
6
b
a
30°
1
30°
O
(iv)
F
30
70
30°
30°
F
ISOMETRIC PROJECTION
(v)
4
5
3
B
C
b
A
6
2
a
30°
1
30°
F
O
(v)
30
70
30°
30°
F
O
ISOMETRIC PROJECTION
(vi)

Fig 1.4

Example 2 : A hexagonal prism of base side 30 mm and height of 70 mm resting on its face on H.P. with two of its bases are parallel to V.P. Then the isometric projection will be drawn as under.

Solution : Refer Fig 1.4

Steps (i) and (ii) will be same as above in example 1.

(iii) Draw the box with OA length at the side of direction of viewing, OB length on the vertical line and OC length equal to isometric length of height of prism on the third principal axis.

(iv), (v) & (vi) will be same as above in example 1.

Let us consider more examples of the prisms with the same steps of construction.

Example 3: Draw the isometric projection of a cube of side 50 mm.

Solution : Refer Fig. 1.5

In cube all the sides have equal length. So take isometric 50 mm on each principal axis and complete the cube with thick lines, dimensioning, center line and direction of viewing.

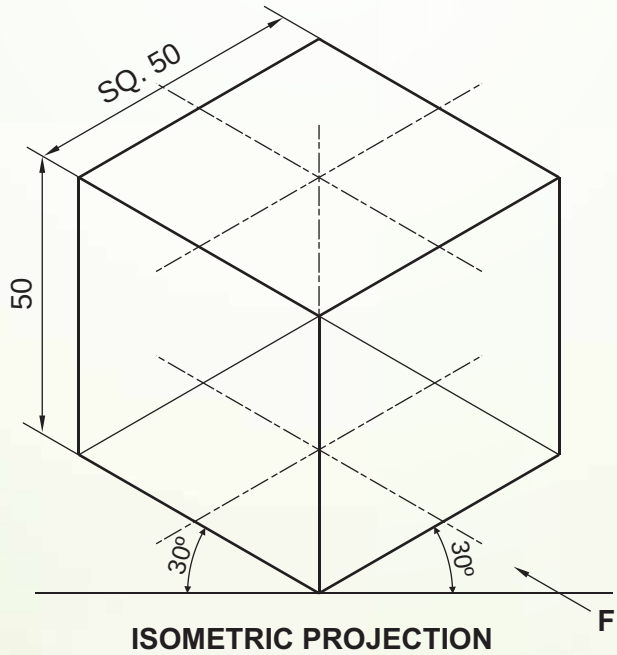

Fig 1.5

Example 4 : Draw the isometric projection of square prism of 40 mm base edge and 60 mm axis resting;

(a) On its base on H.P. keeping one of its base edge parallel to V.P.

(b) On its face on H.P. keeping its base perpendicular to V.P.

Solution : (a) Refer Fig. 1.6 (a)

To draw the isometric projection of a vertical square prism with vertical axis and one base side parallel to V.P. take OA & OB equal to 40 mm on each horizontal line and OC equal to is 60 mm, on vertical line. Complete the isometric projection with thick lines, dimensioning, center lines and direction of viewing.

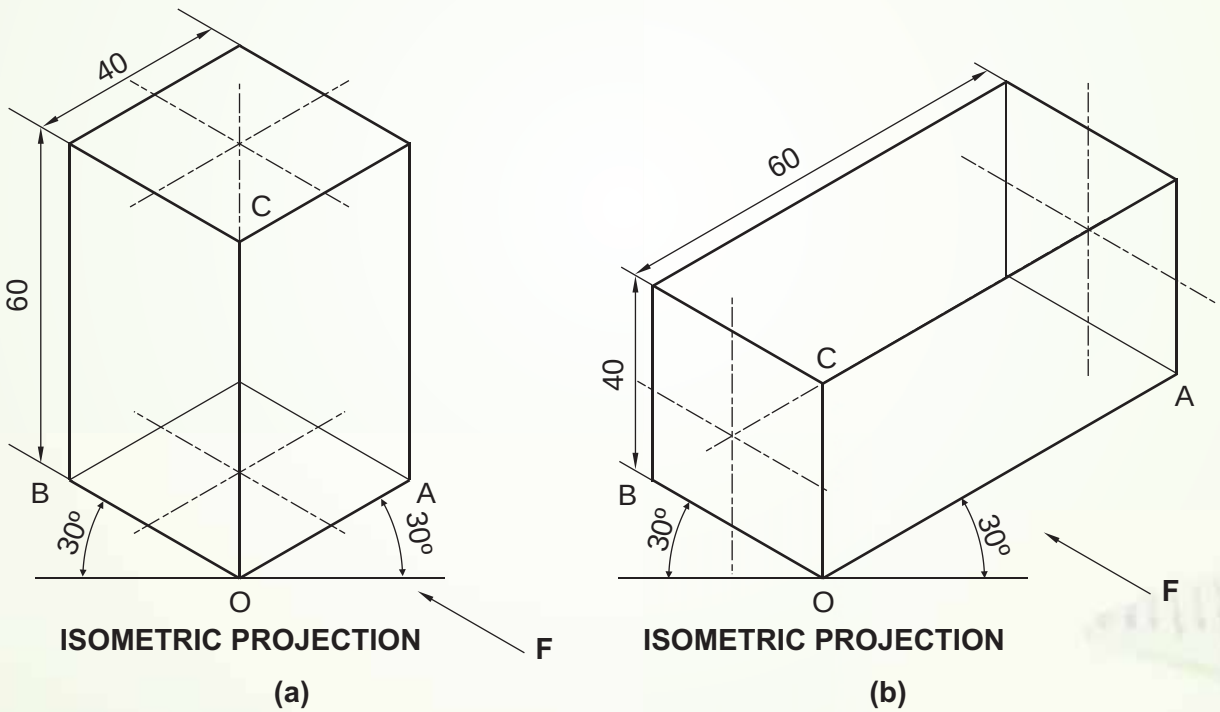

Fig 1.6

(b) Refer fig 1.6(b)

To draw the isometric projection of a square prism with horizontal axis and base perpendicular to V.P. take OB equal to 40 mm on the horizontal line on the side of direction of viewing, OA equal to 60 mm on another horizontal line and OC equal to 40 mm on vertical line. Complete the isometric projection with thick lines, dimensioning, center lines and direction of viewing.

Example 5: Draw the isometric projection of an equilateral triangular prism of 50 mm base side and 75 mm axis resting on its base in H.P. with one of its base edge parallel to V.P. in front.

Solution : Refer Fig 1.7

Steps (i) Draw the helping figure of triangle with iso 50 mm length with one of its base edge parallel to V.P. in front.

(ii) Draw the isometric box with OA and OB from helping figure and OC equal to isometric 75 mm.

(iii) Copy the points of triangle and co-ordinates of center to isometric box.

(iv) Join the visible edges by thick lines and axis by center lines.

(v) Complete the isometric projection with dimensioning and direction of viewing.

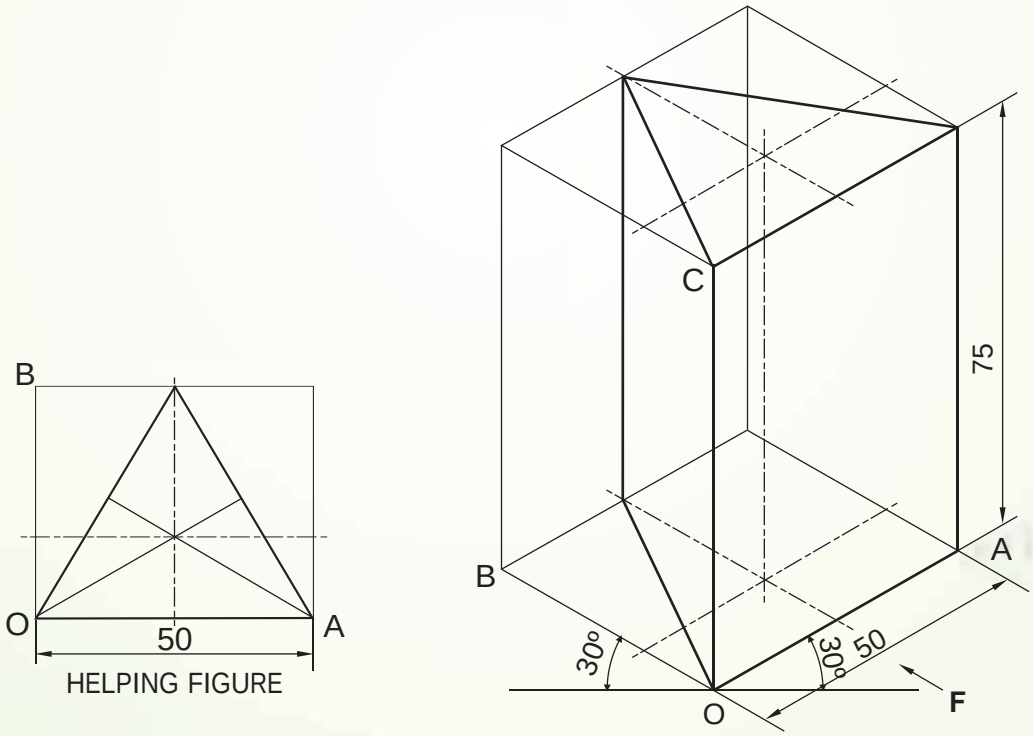

ISOMETRIC PROJECTION
Fig 1.7

Example 6: An equilateral triangular prism of 50 mm base side and 70 mm long resting on one of its face on H.P. with axis of it perpendicular to V.P. Draw its isometric projection.

Solution: Refer Fig. 1.8

Steps (i) Draw the helping figure of triangle with iso 50 mm length with one of its base edge in H.P.

(ii) Draw the isometric box with OA on the horizontal line towards the direction of viewing, OB on the vertical line and OC equal to isometric 70 mm on another horizontal line.

(iii) Copy the points of triangle and co-ordinates of centre to isometric box.

(iv) Join the visible edges by thick lines and axis by centre line.

(v) Complete the isometric projection with dimensioning and direction of viewing.

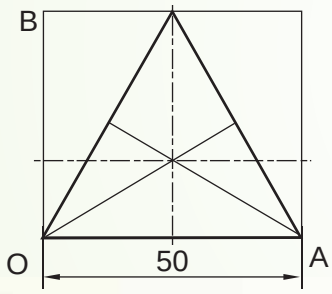

HELPING FIGURE

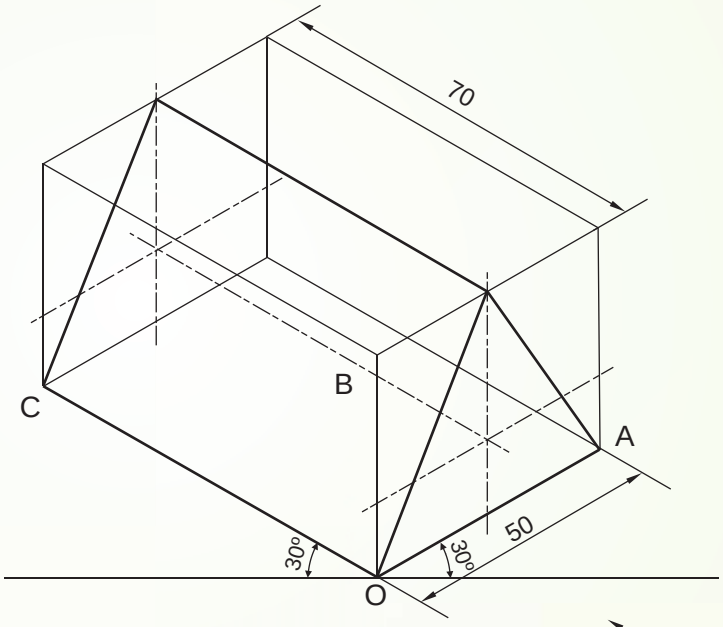

ISOMETRIC PROJECTION

Fig 1.8

Example 7: Draw the isometric projection of a pentagonal prism of 30 mm base side and 65 mm of axis. The axis of the prism is perpendicular to H.P. and one of its base edge is perpendicular to the V.P.

Solution: Refer Fig. 1.9

Steps (i) Draw the helping figure of pentagon with iso 30 mm of its base edge perpendicular to V.P.

(ii) Draw the isometric box with OA & OB from helping figure and OC equal to iso 65 mm.

(iii) Copy the points of pentagon and co-ordinates of centre to isometric box.

(iv) Join the visible edges by thick lines and axis by center line.

(v) Complete the isometric projection with dimensioning and direction of viewing.

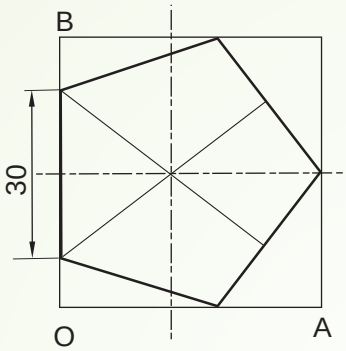

HELPING FIGURE

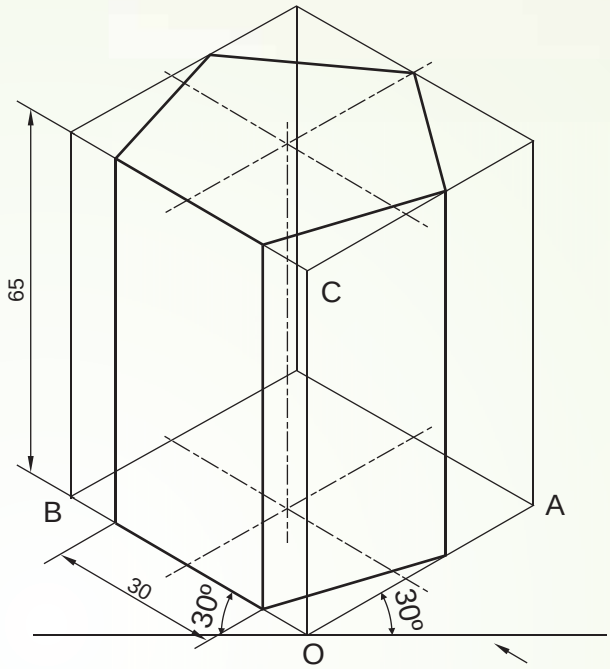

ISOMETRIC PROJECTION

Fig 1.9

Example 8: A Pentagonal prism of base side of 25 mm and axis length of 55 mm is resting on its face with its axis parallel to both H.P and V.P. Draw its isometric projection.

Solution: Refer fig 1.10

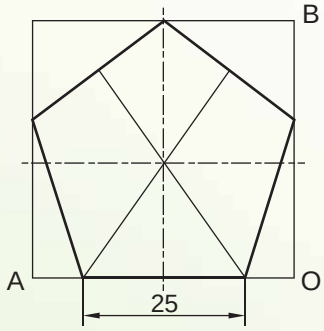

HELPING FIGURE

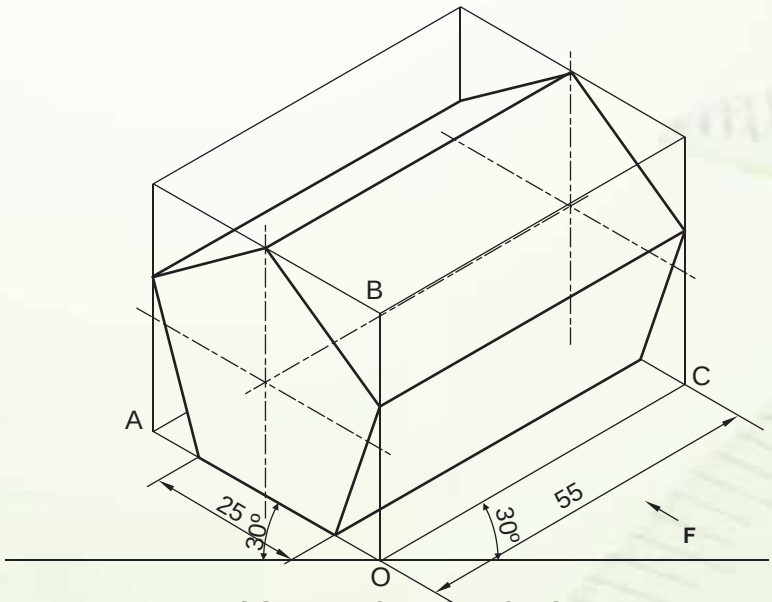

ISOMETRIC PROJECTION

Fig 1.10

Steps (i) Draw the helping figure of pentagon with iso 25 mm length as one of its base edge in H.P.

(ii) Draw the isometric box with OA on the horizontal line parallel to the direction of viewing, OB on the vertical line and OC equal to iso 55 mm on another horizontal line.

(iii) Complete the isometric projection of pentagonal prism in this isometric box by the same step discussed in earlier examples.

1.3.2 PYRAMIDS

Pyramids are the solids with a base and slant triangular faces. These faces meet at a point called apex of the pyramid. In pyramids if they are kept on their base then they are called upright / vertical pyramids but if they are kept on their vertex on H.P. then they are called inverted pyramids.

Let us draw some examples.

Example 9:

Draw the isometric projection of a pentagonal pyramid of base side 30 mm and axis of 60 mm resting on its base on H.P. with one of its base side parallel to V.P. and nearer to the observer.

Solution : Refer Fig. 1.11

Steps (i) Draw the pentagon with iso 30 mm and one of its base edge parallel to V.P. and nearer to the observer.

(ii) Complete the helping view figure by enclosing rectangle and center lines of pentagon.

(iii) Copy the dimensions of helping figure i.e. OA and OB on the horizontal line as shown and draw the center lines of Pentagon in it.

(iv) Draw the vertical axis in upright position from the center of pentagon equal to iso 60 mm.

(v) Join the visible edges, starting from the vertex to base corners by thick lines.

(vi) Complete the isometric projection of pentagonal pyramid with direction of viewing and dimensioning.

Example 10: Draw the isometric projection of an inverted pentagonal pyramid of base side 30 mm and axis of 60 mm resting on its base on H.P. with one of its base side parallel to V.P. and nearer to the observer.

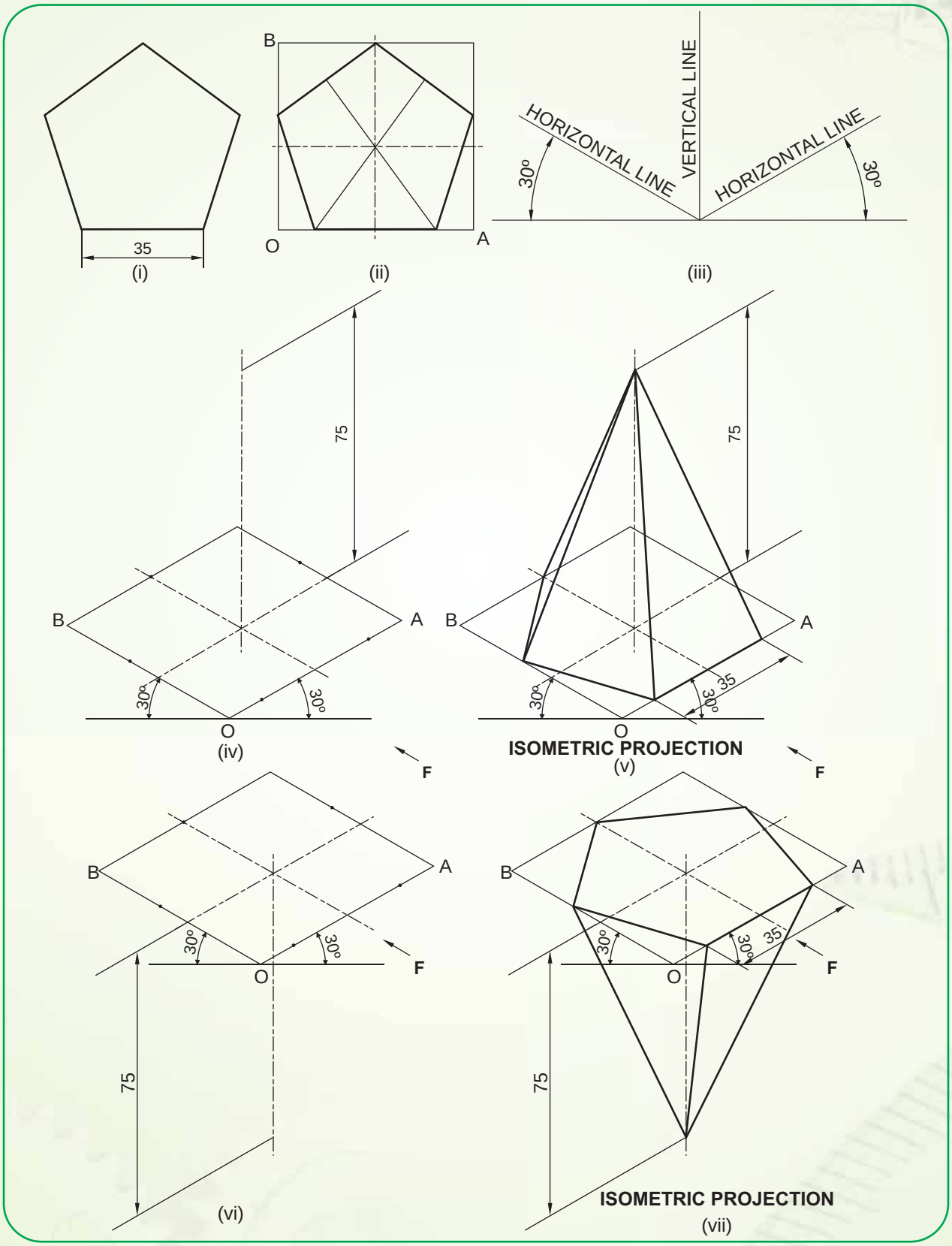
35
(i)
B
O
A
(ii)
HORIZONTAL LINE
VERTICAL LINE
HORIZONTAL LINE
30°
30°
(iii)
75
B
A
30°
30°
O
(iv)
F
75
B
A
30°
35
30°
O
ISOMETRIC PROJECTION
(v)
F
B
A
30°
30°
O
F
75
(vi)
B
A
30°
30°
35
O
F
75
ISOMETRIC PROJECTION
(vii)

Fig. 1.11

Solution : Refer Fig. 1.11

Steps (i) to (iii) will be same as above.

(iv) Draw the vertical axis in downward direction from the center of pentagon equal to iso 60 mm.

(v) & (vi) will be same.

Example 11: Draw the isometric projection of a square pyramid of base edge 50 mm and axial height of 80 mm kept in inverted position with two of its base side parallel to V.P.

Solution : Refer Fig 1.12

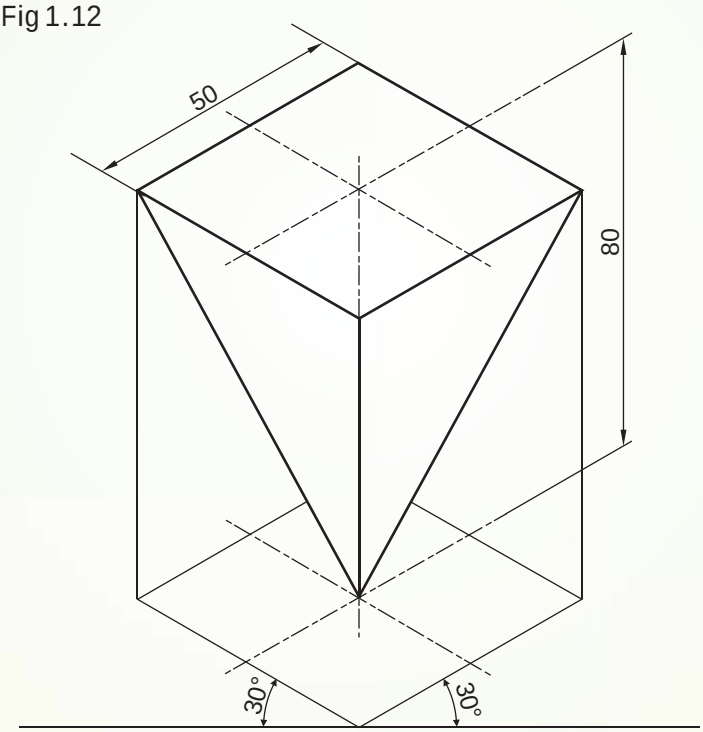

ISOMETRIC PROJECTION F

Fig 1.12

Example12: A right triangular pyramid of base edge 50 mm and axial height of 80 mm is kept on its base keeping one of its base side parallel to V.P. and away from it. Draw its isometric projection.

Solution: Refer Fig. 1.13

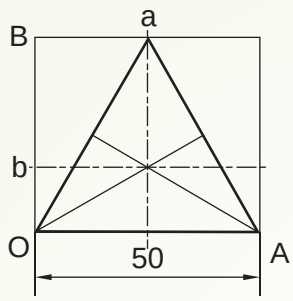

HELPING FIGURE

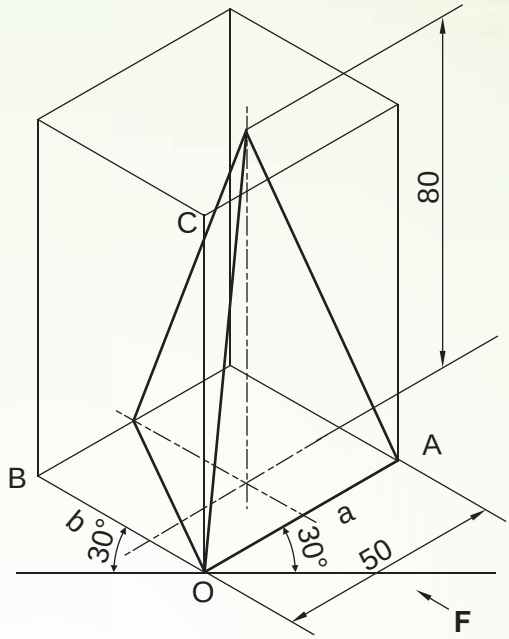

ISOMETRIC PROJECTION

Fig 1.13

Example:13: Draw the isometric projection of an inverted triangular pyramid of base side 50 mm and axis of 80 mm keeping one of its base side parallel to V.P. and nearer the observer.

Solution : Refer Fig. 1.14

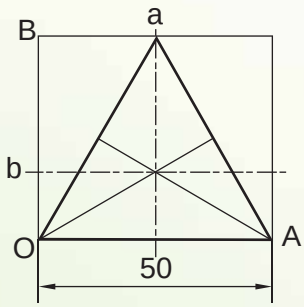

HELPING FIGURE

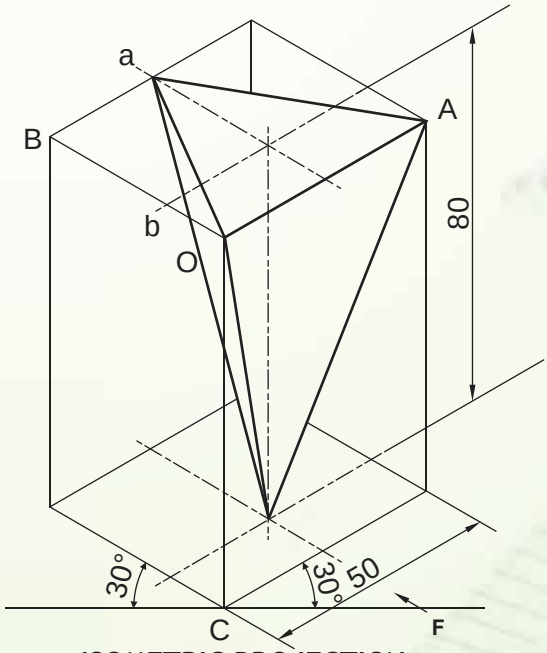

ISOMETRIC PROJECTION

Fig 1.14

Example 14: Draw the isometric projection of a hexagonal pyramid having base edge of 40 mm and axis 70 mm resting on its base keeping two of its base side parallel to the V.P.

Solution: Refer Fig. 1.15

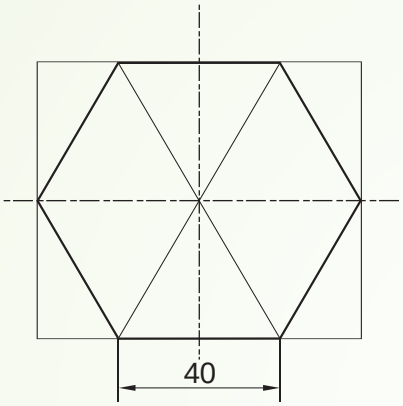

HELPING FIGURE

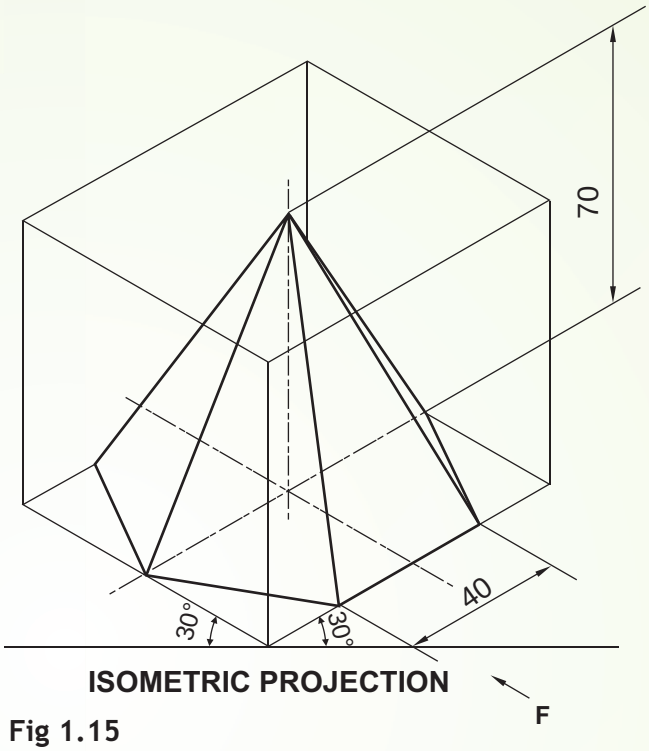

ISOMETRIC PROJECTION

Fig 1.15

Example 15 : Draw the isometric projection of an inverted hexagonal pyramid of base edge 30 mm and height of 60 mm keeping two of its base side parallel to the V.P.

Solution: Refer Fig. 1.16

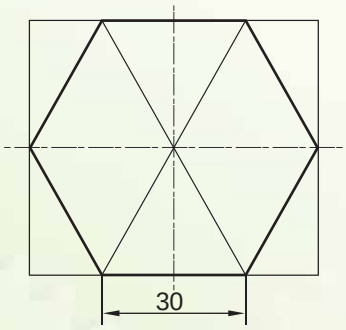

HELPING FIGURE

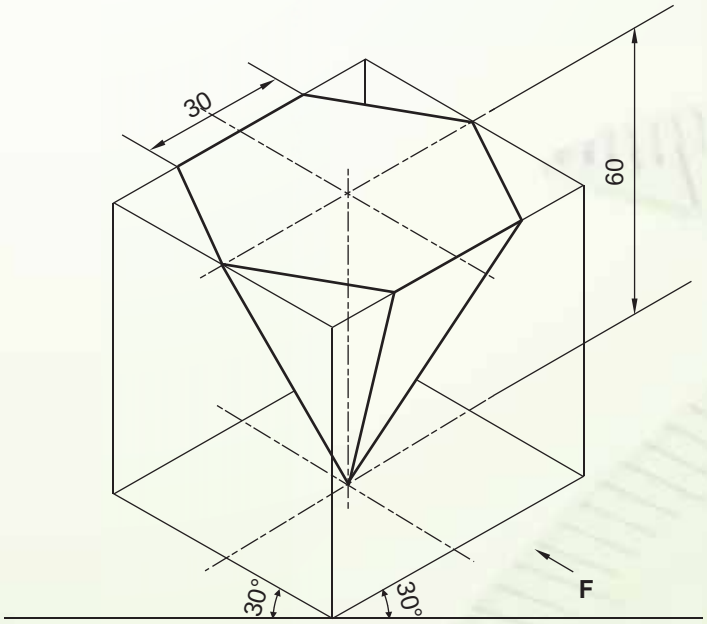

Fig 1.16 ISOMETRIC PROJECTION

1.3.3 FRUSTUM OF PYRAMID

We are well aware about the frustum of pyramids that they are the truncated lower portion of the pyramid. So frustum of pyramid is having one shorter base edge end and another longer base edge end. To draw the isometric projection of the frustum of pyramid, we have to draw the helping views for both the ends.

Let us draw some examples.

Example 16 : Draw the isometric projection of a frustum of square pyramid of shorter base edge 30 mm and longer base edge 50 mm with the axial height of 60 mm, kept on H.P. on its longer end and two of its base edges are parallel to V.P.

Solution : Refer Fig 1.17

Steps (i) Draw the helping figures of both the base ends with iso 30 mm and iso 50 mm.

(ii) Complete the helping figures by enclosing rectangle and centre lines.

(iii) Draw the isometric box with OA length on the side of direction of viewing, OB length on the another horizontal line and OC equal to iso 60 mm, height of frustum of pyramid on vertical line.

(iv) Draw the center lines on the upper end of the isometric box and mark centre as M.

(v) Copy the lengths of helping figures of shorter end 'oa' and 'ob' by placing 'm' on 'M'.

(vi) Mark all the points of shorter end helping figure on the upper end of isometric box and all the points of longer end helping figure on the lower end of isometric box.

(vii) Join the visible edges by thick lines and axis by center line.

(viii) Complete the isometric projection of frustum of square pyramid with dimensioning and direction of viewing.

Example 17 : Draw the isometric projection of a frustum of square pyramid of shorter base edge 30 mm and longer base edge 50 mm with the axial height of 60 mm, kept on H.P. on its shorter end and two of its base edges are parallel to V.P.

Solution: Refer Fig 1.17

Steps (i) to (iii) will be same as above.

(iv) Draw the center lines of the lower end of the isometric box as the shorter end of the given frustum of pyramid is at lower end and mark center as M.

(v) to (viii) will be same as above.

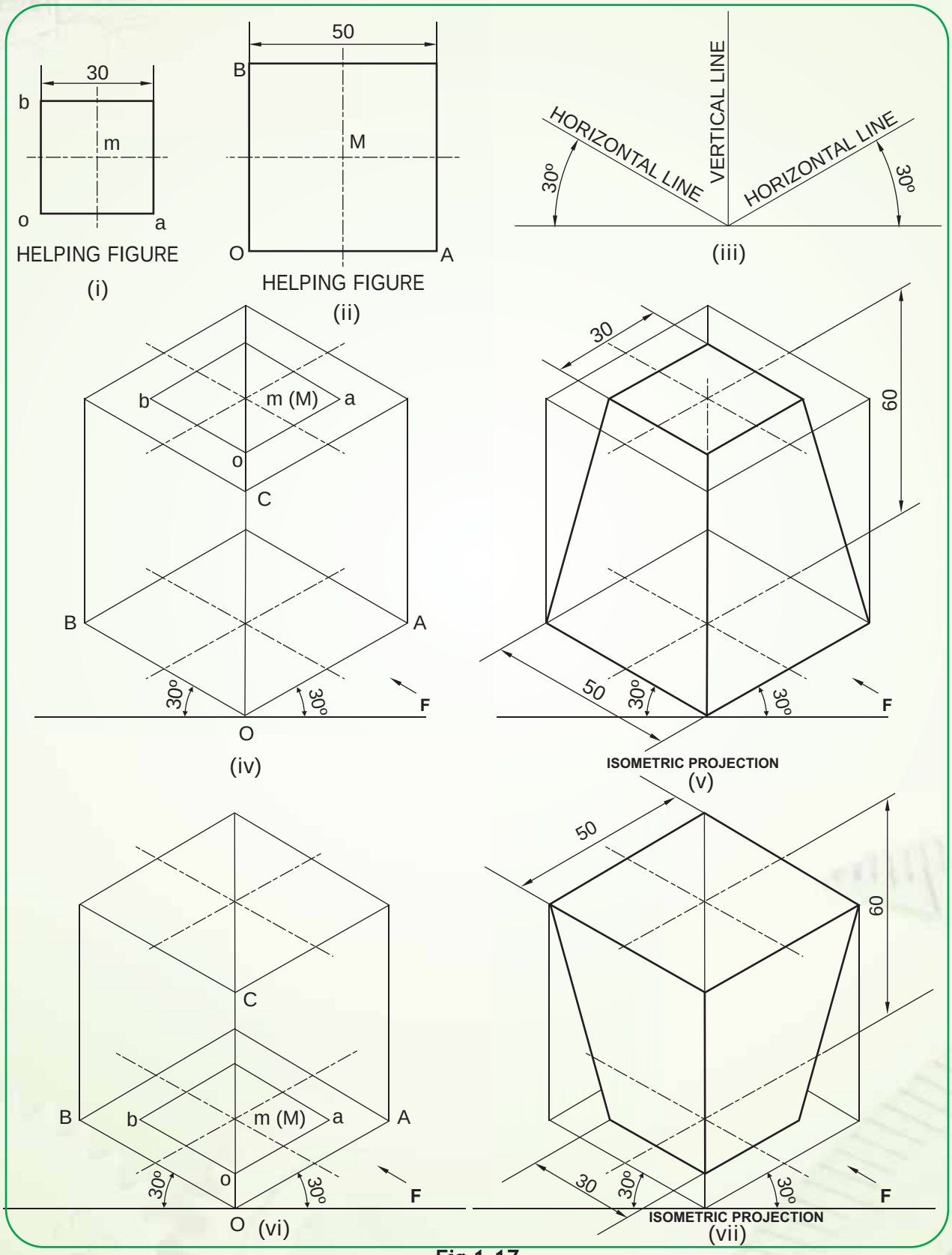
30
b
m
o
a
HELPING FIGURE
(i)
50
B
M
O
A
HELPING FIGURE
(ii)
VERTICAL LINE
HORIZONTAL LINE
HORIZONTAL LINE
30°
30°
(iii)
b
m (M)
a
o
C
B
A
30°
30°
F
O
(iv)
30
60
50
30°
30°
F
ISOMETRIC PROJECTION
(v)
C
B
b
m (M)
a
A
o
30°
30°
F
O
(vi)
50
60
30
30°
30°
F
ISOMETRIC PROJECTION
(vii)

Fig 1.17

Example 18 : Draw the isometric projection of the frustum of triangular pyramid having top base edge 40 mm and bottom base edge 50 mm with a height of 75 mm resting on its longer base keeping one of its base side parallel to the V.P. and nearer to the observer.

Solution: Refer Fig 1.18

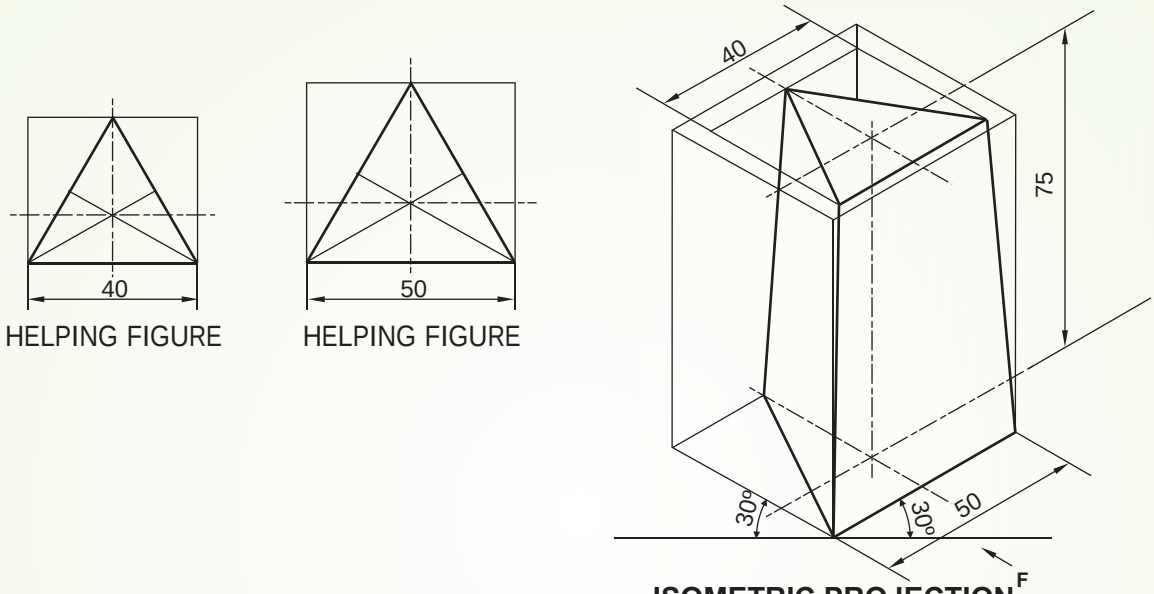

Fig 1.18

Example 19 : A frustum of an inverted hexagonal pyramid of shorter base side 20 mm and longer base side 40 mm and axial height of 65 mm resting on its shorter end on H.P. with two of its base sides perpendicular to the V.P. Draw its isometric projection.

Solution: Refer Fig 1.19

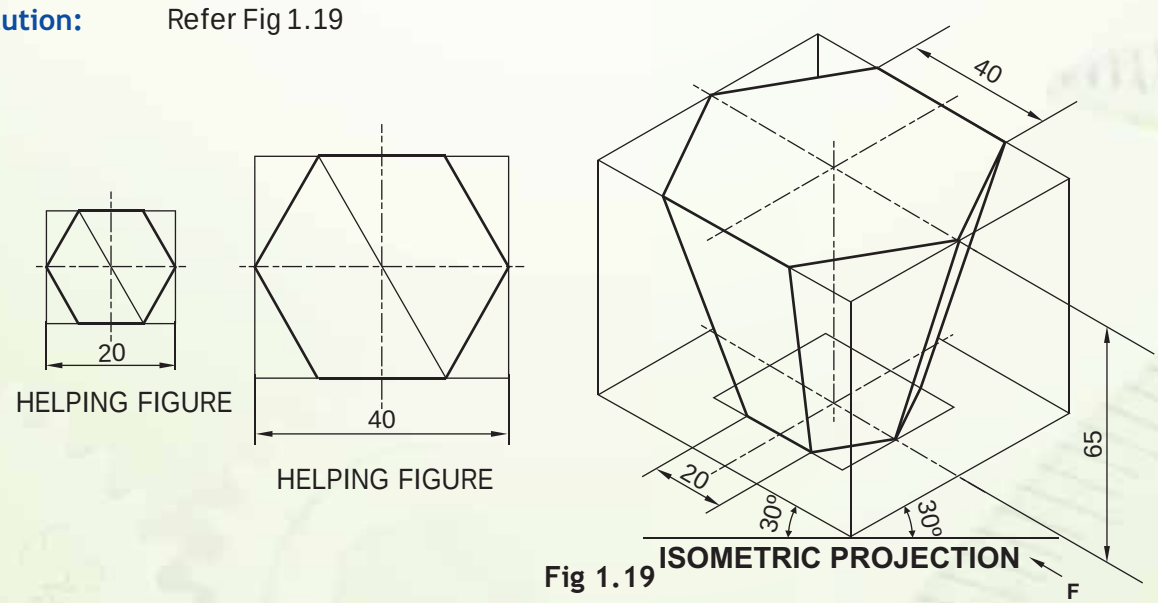

Fig 1.19

Example 20 : Draw the isometric projection of frustum of pentagonal pyramid having longer base side 40 mm and shorter base side 30 mm with axis of 70 mm resting on its longer side base keeping one of its base side parallel to the V.P. and nearer to the observer.

Solution : Refer Fig. 1.20

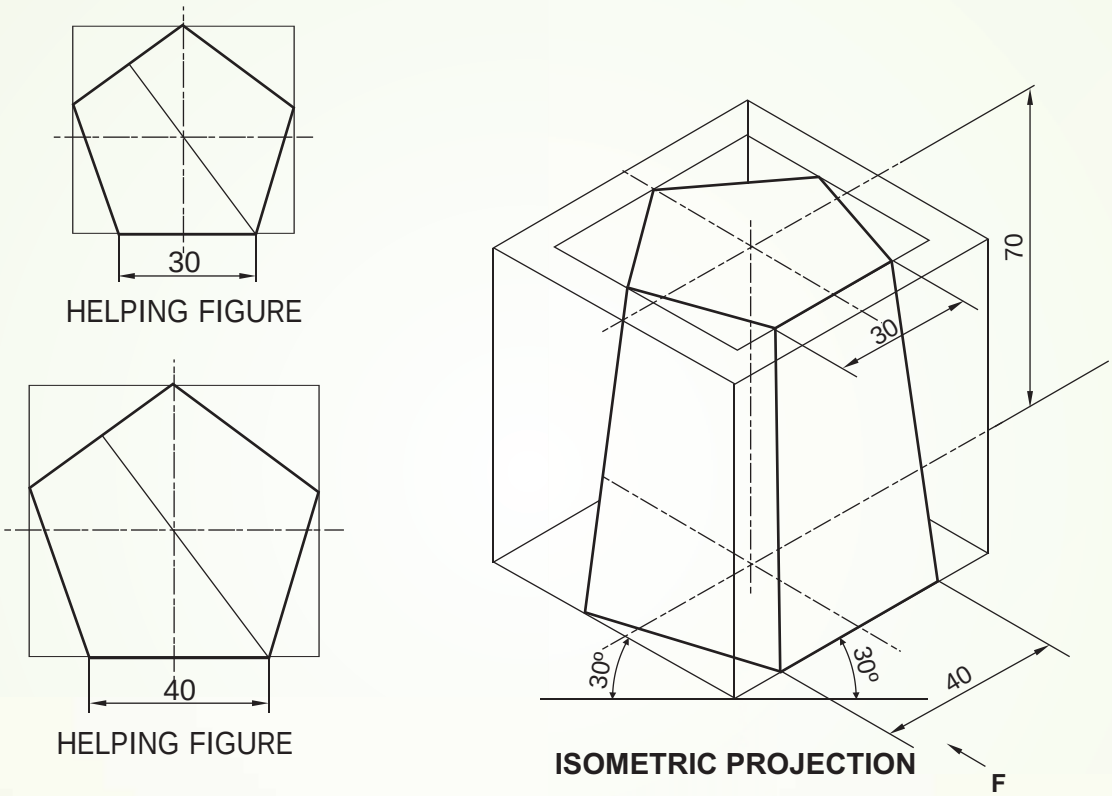

Fig 1.20

1.3.4 CYLINDER AND CONE

Cylinder and cone are the solids in which base is a circle. In our earlier class we have studied that the circle is drawn in isometric projection by different methods. We can use the "four centre method" or "circular arc method" to draw the circle in isometric projection. The cylinders and cones are drawn with the same steps of prism and pyramids except one additional step for drawing the circle.

Let us draw some examples.

Example 21: Draw the isometric projection of a cylinder of diameter 40 mm and axial length of 70 mm lying on the H.P. keeping its axis parallel to H.P. and V.P. both.

Solution: Refer Fig 1.21

Steps (i) Draw the isometric box of a square prism of 40 mm base side and 70 mm axis by keeping the axis parallel to both H.P. and V.P.

(ii) In the two rhombuses draw the ellipse by four center method.

(iii) Draw two common tangents to the two ellipses.

(iv) Draw the visible lines and curves by thick lines.

(v) Complete the isometric projection of cylinder with dimensioning and direction of viewing.

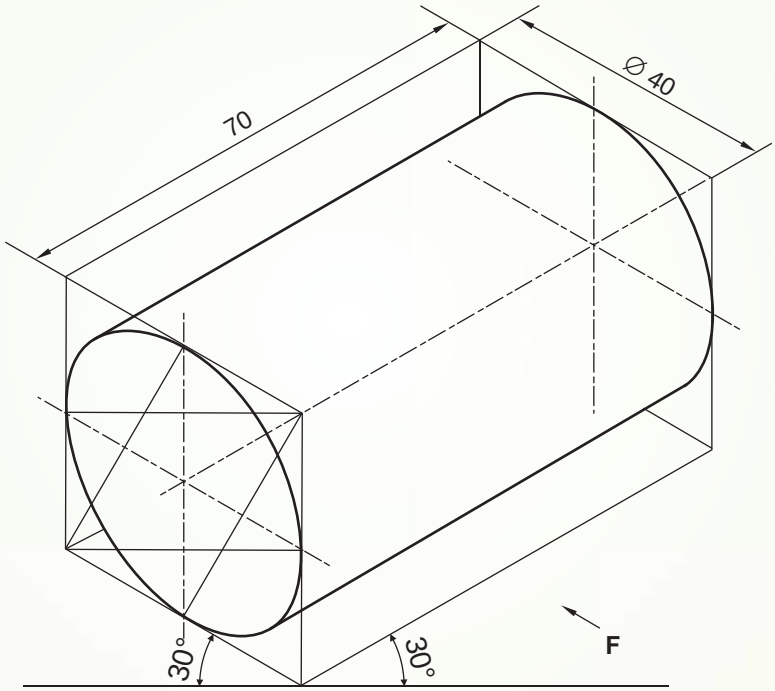

ISOMETRIC PROJECTION
Fig 1.21

Example 22 : Draw the isometric projection of a cylinder of height of 75 mm and diameter of 50 mm resting on its base keeping the axis parallel to V.P.

Solution: Refer Fig 1.22

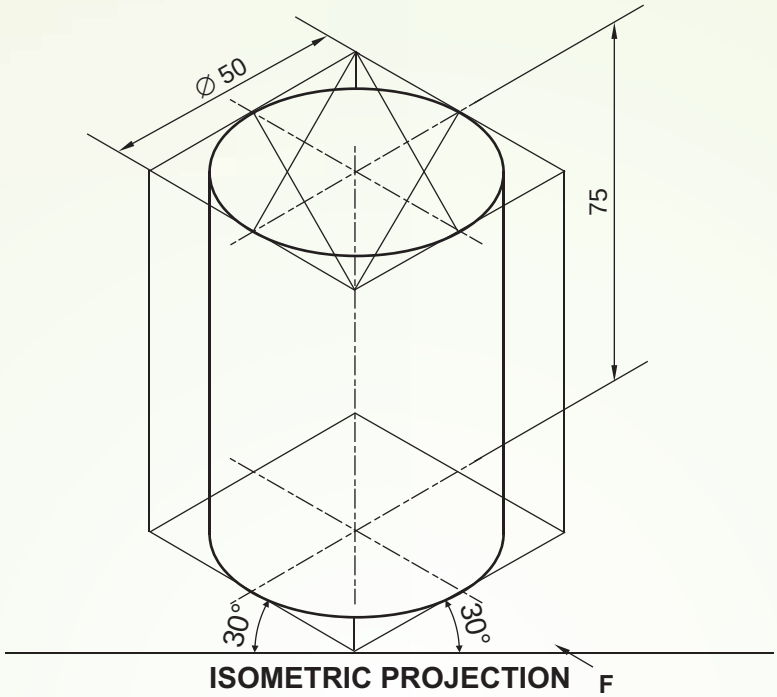

ISOMETRIC PROJECTION

Fig 1.22

Example 23 : Draw the isometric projection of cone of diameter 40 mm and axis of 60 mm resting on its base perpendicular to H.P.

Solution : Refer Fig 1.23

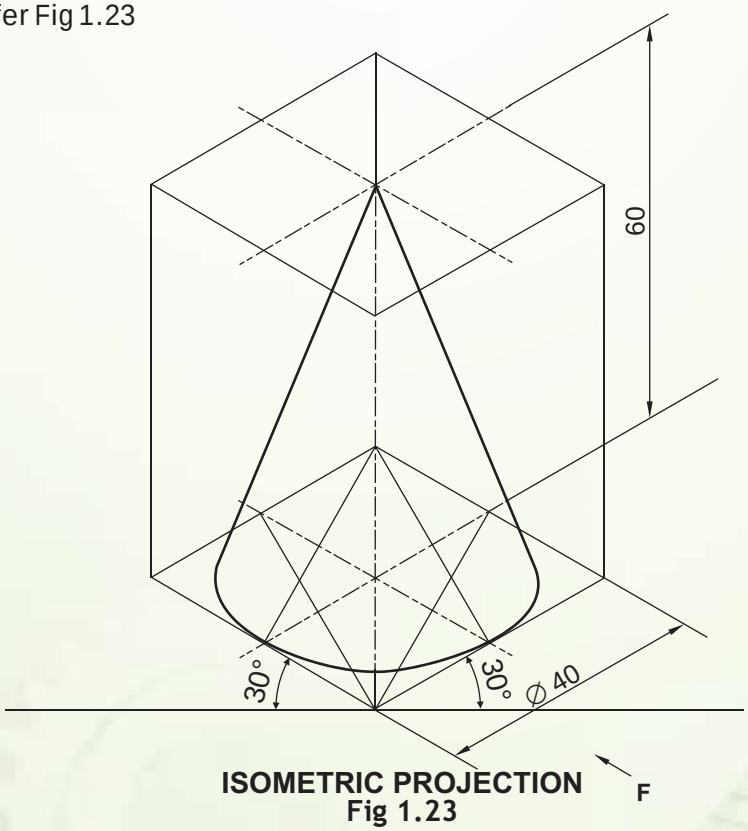

ISOMETRIC PROJECTION

Fig 1.23

Example24 : Draw the isometric projection of an inverted cone of diameter 50 mm and axis of 80 mm keeping its axis perpendicular to H.P.

Solution: Refer Fig 1.24

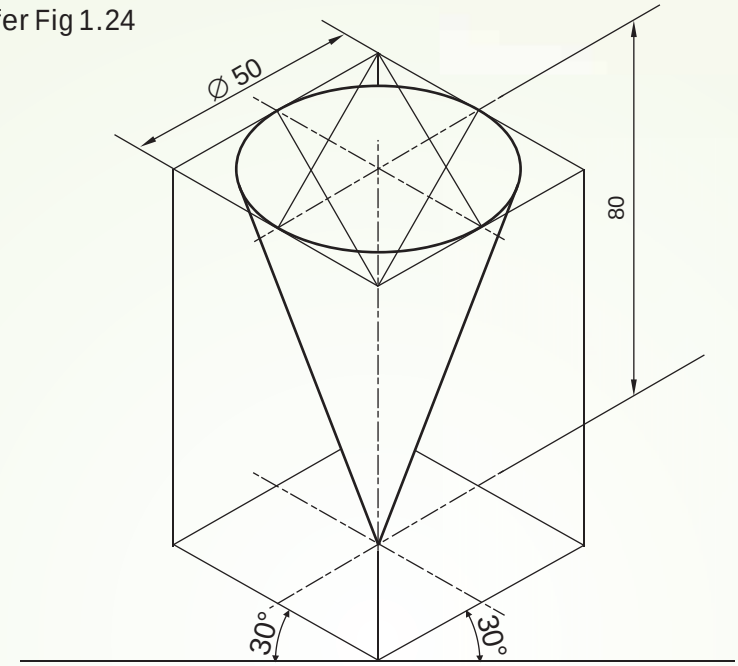

ISOMETRIC PROJECTION F
Fig 1.24

Example 25 : Draw the isometric projection of a frustum of a cone of diameter 30 mm at smaller end, diameter 50 mm at bigger end and the axial height is 70 mm. It is resting on its bigger end on H.P. keeping its axis vertical.

Solution: Refer Fig 1.25

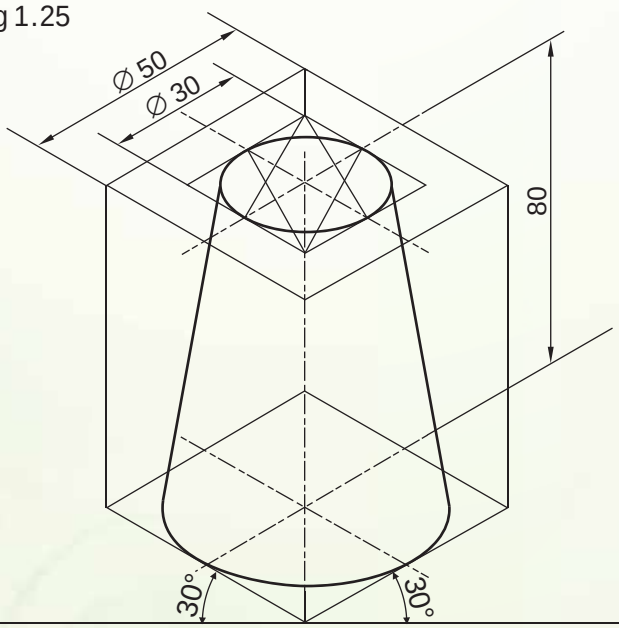

ISOMETRIC PROJECTION F
Fig 1.25

1.3.5 SPHERES AND HEMISPHERES

Spheres are the solids without any edge or vertex. When they are visualized from any direction they look like a circle. Due to this unique characteristic of sphere, they have only one point of contact with the plane of rest. This point of contact will not be visible in isometric projection of sphere.

Let us draw some examples.

Example 26 : Draw the isometric projection of a sphere of diameter 50 mm.

Solution : Refer Fig. 1.26

Steps (i) Draw isometric projection of square in horizontal plane with side of iso 50 mm length.

(ii) Draw the center lines of this square.

(iii) Take a point O in vertically upward direction equal to iso 25 mm i.e. Isometric length of radius of spheres from the center of the square drawn in step 2.

(iv) Taking this point O as a center and true 25 mm as the radius, draw a circle.

(v) This drawn circle is the isometric projection of the given sphere.

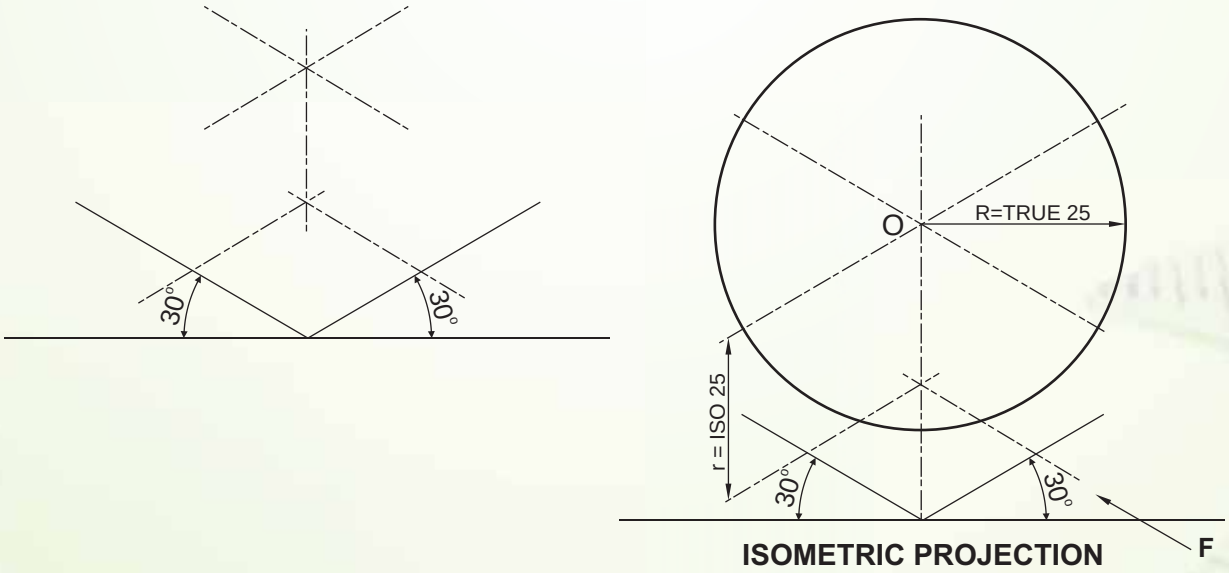

Fig 1.26

Note: Isometric view of a sphere is always a circle of true-radius whose centre is obtained with isometric radius height.

Example 27 : Draw the isometric projection of a hemisphere of 60 mm diameter resting on its curved surface on H.P.

Solution: Refer Fig 1.27

Steps (i) Draw the isometric projection of a circle of 60 mm diameter ie. ellipse by four center method in H.P. (as learnt in class XI).

(ii) Draw an arc with O as center and half of the major axis of ellipse as radius towards lower half of the ellipse.

(iii) Complete the hemisphere with dimensioning, center lines and direction of viewing. Using conventional lines.

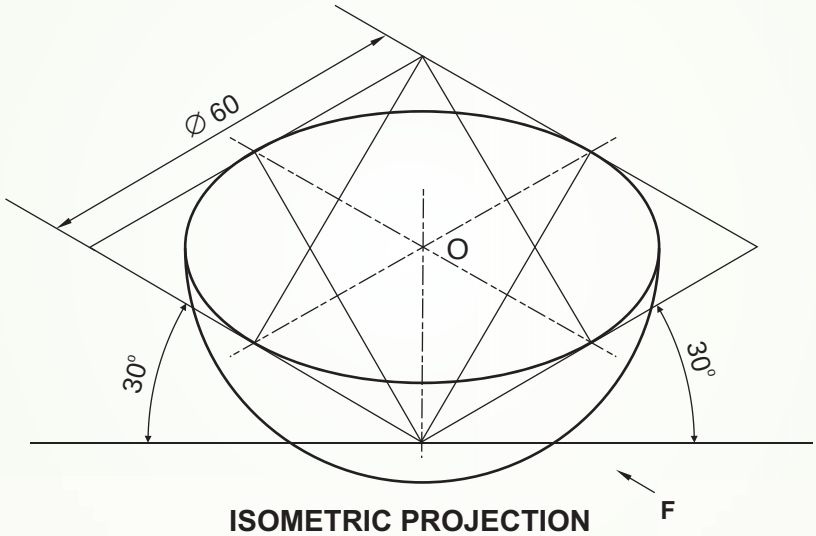

ISOMETRIC PROJECTION
Fig 1.27

EXERCISE

1. Draw an isometric projection of a triangular prism having base edge of 65 mm and axial height of 85 mm, resting on one of its rectangular faces on H.P. keeping its base perpendicular to V.P.

2. Draw an isometric projection of a pentagonal prism of base side of 35 mm and axial length of 60 mm kept on one of its face on H.P. with one rectangular face parallel to H.P. on top and axis is perpendicular to V.P.

3. A square pyramid is resting on its base, having base edge 60 mm and axial height of 70 mm with its base edge parallel to V.P. Draw its isometric projection.

4. Draw an isometric projection of a hexagonal pyramid having base edge 35 mm and axis of 65 mm resting on its base on H.P. Keep two of its base side perpendicular to V.P.

5. Draw an isometric projection of a frustum of hexagonal pyramid of shorter base side of 25 mm and longer base side of 45 mm and height of 75 mm resting on its larger base on H.P. with two of its base sides parallel to V.P.

6. Draw an isometric projection of a hemisphere of 50 mm diameter kept with circular face on H.P.

1.4 COMBINATION OF TWO SOLIDS

We have already studied and learnt the isometric projection of single geometrical solids in vertical position and horizontal position by using box method from the helping view of the solid. Now we will learn the two geometrical solids placed together i.e. one resting (either vertical or horizontal) on top of the other solid in isometric position (either vertical or horizontal). This is known as 'combination of solids'. As per the course content in our syllabus we are going to restrict our combination using two solids only.

The study of the combination of solids will help us in understanding the machine blocks to be done in isometric position and assembly drawings of the functional machine components at a later stage in Engineering Graphics.

Example : 1.21 Draw an Isometric Projection of a square prism having side of the square = 30 mm and height = 54 mm standing (upright) and centrally on a flat square slab of thickness = 26 mm and its base side = 52 mm.

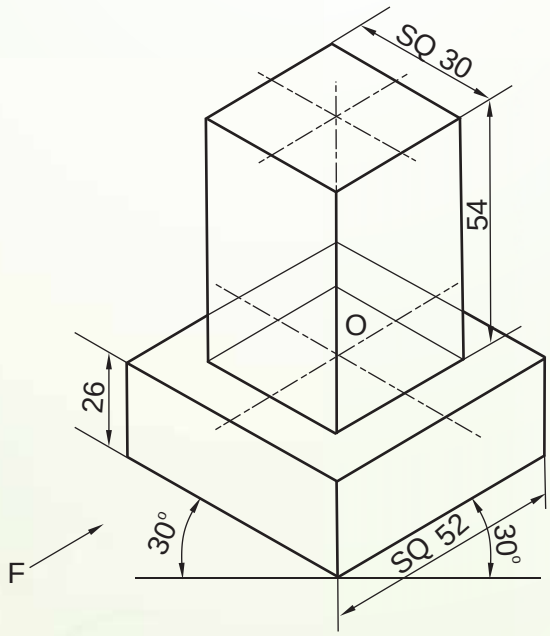

ISOMETRIC PROJECTION

Fig 1.28

Steps:

1. Draw an isometric projection of the square slab.
2. Indicate the center of the top face with centre lines.
3. Around the centre 'O' draw the rhombus of the square prism and lift it upto its required height.
4. Join all the visible edges (no hidden lines) of the two solids by using thick lines.
5. Complete the isometric projection of the two solids with dimensioning, direction of viewing and their common axis using convention lines.

Example: 1.22 Draw an Isometric Projection of 32 mm cube resting centrally on the top face of an equilateral triangular prism having 50 mm base side and height = 30 mm. One rectangular face of the prism is away from the observer and kept parallel to the V.P.

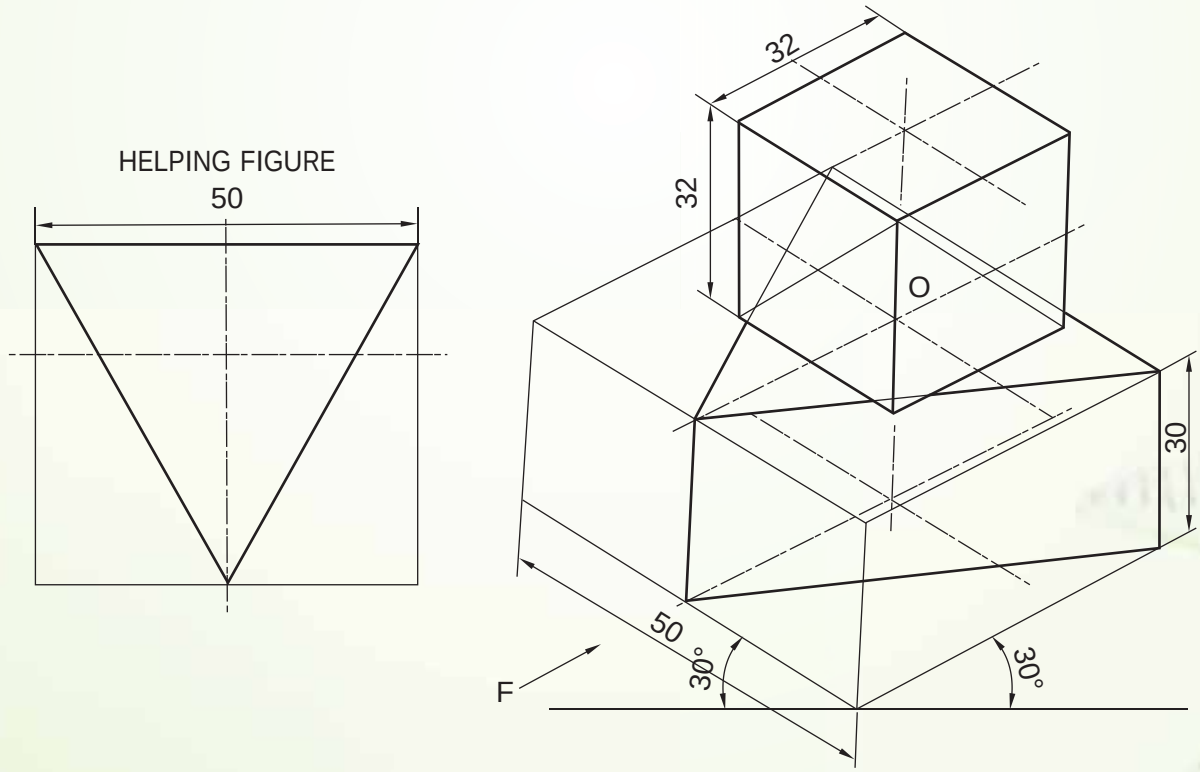

ISOMETRIC PROJECTION

Fig 1.29

Steps:

1. Draw an isometric projection of the box that encloses an equilateral triangular prism having one of its rectangular face at the back.
2. Indicate the centre of the top face with convention lines.
3. Around the centre 'O' draw the rhombus of the square of cube and lift it upto its height equal to the side of cube.
4. Join all the visible edges (no hidden lines) of the two solids by using thick lines.
5. Complete the isometric projection of the two solids with dimensioning, direction of viewing and their common axis using conventional lines.

Example: 1.23 Draw an Isometric Projection of a square pyramid resting vertically and centrally on the top pentagon face of a pentagonal prism, having one rectangular face parallel to V.P. while closer to the observer. Side of the square base = 30 mm, height of pyramid = 50 mm, side of the pentagon = 34 mm and height of the prism = 52 mm.

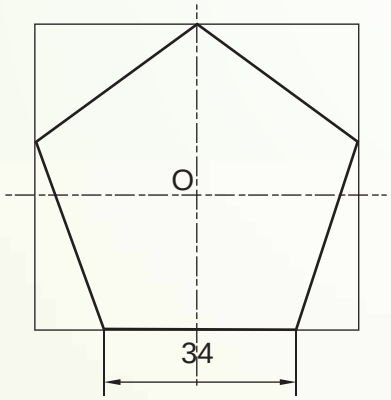

HELPING FIGURE

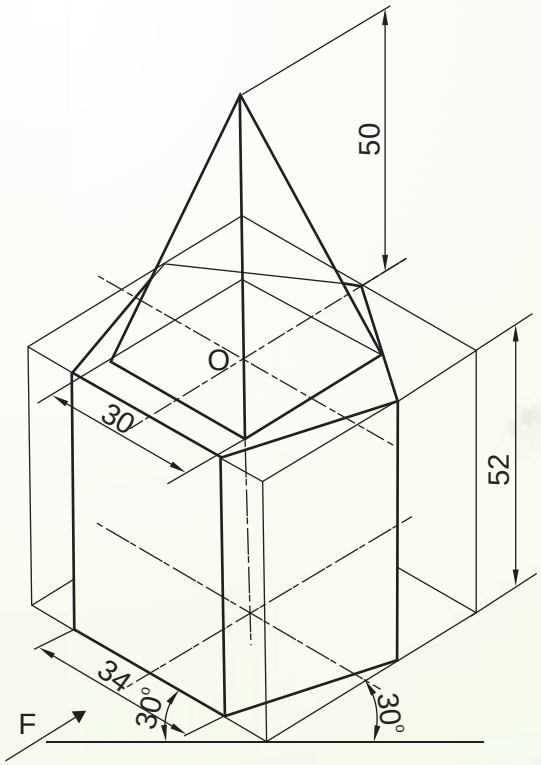

ISOMETRIC PROJECTION

Fig 1.30

Steps:

1. Draw an isometric projection of the box that encloses pentagonal prism having one of its rectangular face, in front, parallel to V.P.
2. Indicate the centre of the top face with conventional lines.
3. Around the centre 'O' draw the rhombus of the square base of the pyramid. Draw the axis of the pyramid from the centre to apex.
4. Join all the visible edges (no hidden lines) of the two solids by using thick lines.
5. Complete the isometric projection of the two solids with dimensioning, direction of viewing and their common axis using conventional lines.

Example:1.24 Draw an Isometric Projection of an equilateral triangular pyramid resting vertically and centrally with one base edge, at the back, parallel to V.P. on the top face of a hexagonal prism having two of its rectangular faces parallel to V.P. Side of the triangle = 34 mm, height of pyramid = 50 mm, side of the hexogen = 30 mm and height of the prism = 60 mm.

HELPING FIGURE

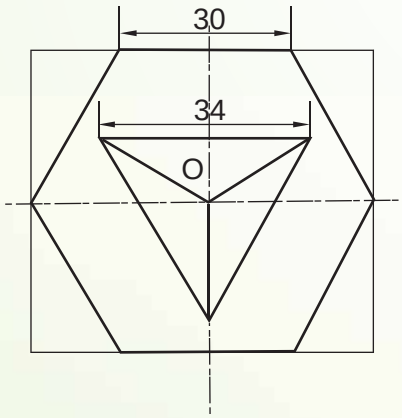

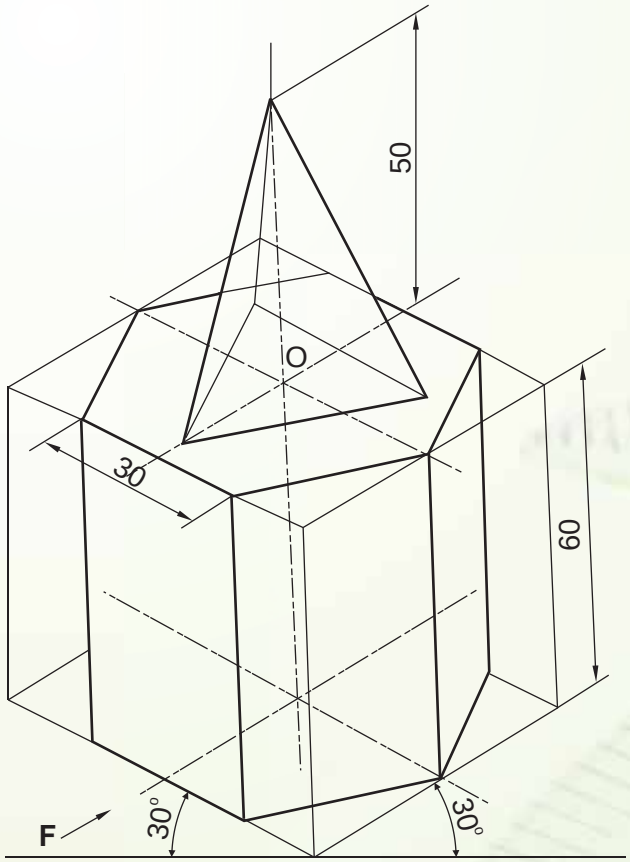

ISOMETRIC PROJECTION

Fig 1.31

Steps:

1. Draw an isometric projection of the box that encloses hexagonal prism having two faces parallel to V.P.
2. Indicate the centre of the top hexagon face with conventional lines.
3. Around the centre 'O' draw the equilateral triangle base of the pyramid. Raise the axis of the pyramid from the center to apex.
4. Join all the visible edges (no hidden lines) of the two solids by using thick lines.
5. Complete the isometric projection of the two solids with dimensioning, direction of viewing and their common axis using conventional lines.

Example: 1.25 Draw an Isometric Projection of a vertical regular pentagonal pyramid resting centrally, having one base edge away from the observer parallel to V.P., on top of a vertical cylinder. Side of the pentagon = 32 mm, height of pyramid = 50 mm, diameter of cylinder = 76 mm and height of cylinder = 40 mm.

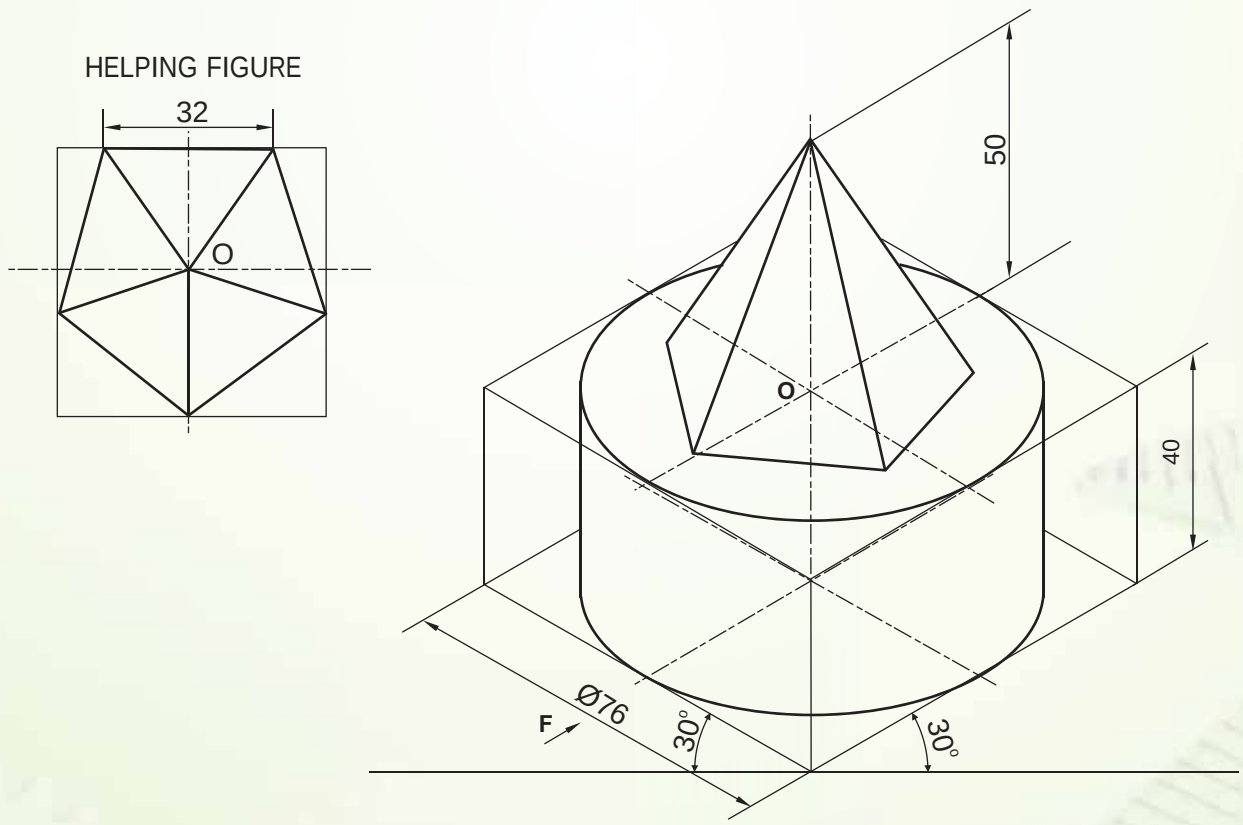

ISOMETRIC PROJECTION

Fig 1.32

Steps:

1. Draw an isometric projection of the box that encloses a cylinder. Use four centre method to form the top elliptical face of the cylinder.
2. Indicate the centre of the top face with conventional lines.
3. Around the centre 'O' draw a pentagonal base of the pyramid. Draw the axis of the pyramid from the centre to apex.
4. Join all the visible edges (no hidden lines) of the two solids by using thick lines.
5. Complete the isometric projection of the two solids with dimensioning, direction of viewing and their common axis using conventional lines.

Example: 1.26 Draw an Isometric Projection of a right circular cone resting vertically and centrally on the top of pentagonal slab having one of its rectangular face perpendicular to the observer. Side of pentagon = 46 mm, thickness of slab = 30 mm, diameter of cone = 40 mm and height of cone = 60 mm.

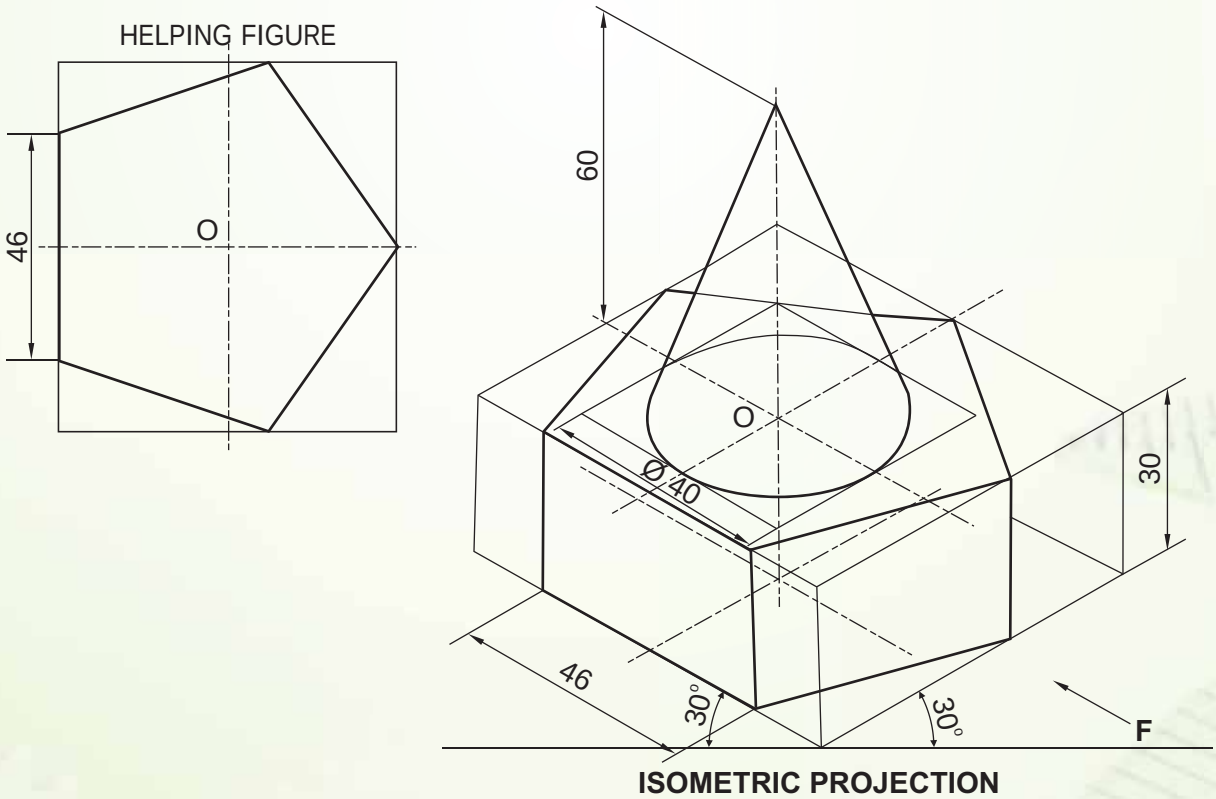

Fig 1.33

Steps:

1. Draw an isometric projection of the box that encloses a pentagonal prism having one rectangular face perpendicular to V.P.
2. Indicate the centre of the top pentagonal face with conventional lines.
3. Around the centre 'O' draw a rhombus for the circular base of cone. Using four centre method draw an ellipse inside. Draw the axis of the cone from the centre of base to apex.
4. Join all the visible edges (no hidden lines) of the two solids by using thick lines.
5. Complete the isometric projection of the two solids with dimensioning, direction of viewing and their common axis using conventional lines.

Exmple : 1.27 Draw an Isometric Projection of hemisphere resting centrally on its curved surface, on the top horizontal rectangular face of an equilateral triangular prism, keeping two triangular faces parallel to the V.P. Side of equilateral triangle = 50 mm, length of the prism = 70 mm and diameter of the hemisphere = 60 mm.

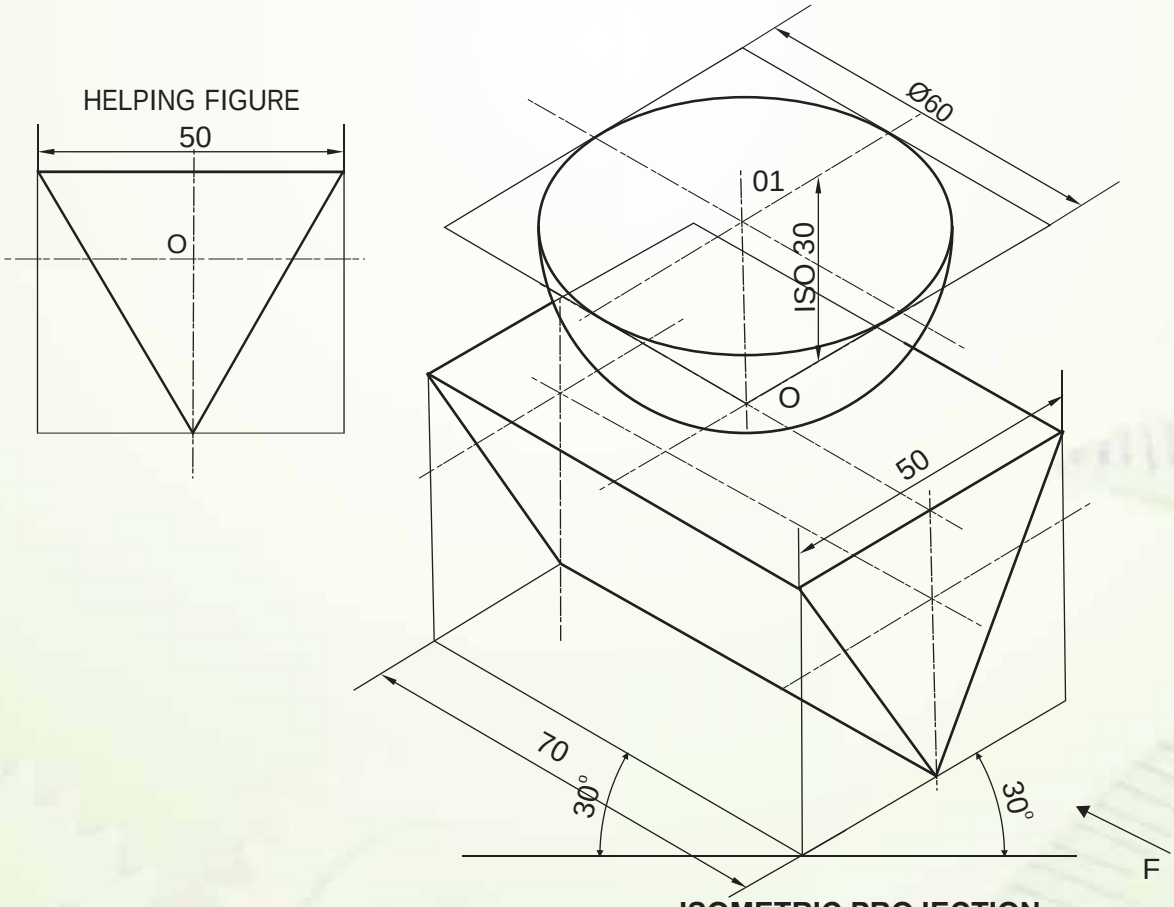

ISOMETRIC PROJECTION

Fig 1.34

Steps:

1. Draw an isometric projection of the horizontal box that encloses an equilateral triangular prism with a rectangular face on top.
2. Indicate the centre of the top rectangular face with conventional lines.
3. From the centre 'O' draw the axis equal to isometric radius of the hemishphere to 01. Around the centre 'O' 1 draw rhombus. Use four center method to form the top elliplical face. Draw an arc to complete the curved surface.
4. Join all the visible edges (no hidden lines) of the two solids by using thick lines.
5. Complete the isometric projection of the two solids with dimensioning, direction of viewing and their axes as applicable, using conventional lines.

Example: 1.28 Draw an Isometric Projection of a sphere resting centrally on a rectangular face of a horizontal hexagonal prism having its hexagonal ends perpendicular to V.P.. Side of hexagon = 30 mm, length of the prism = 80 mm and diameter of sphere = 60 mm.

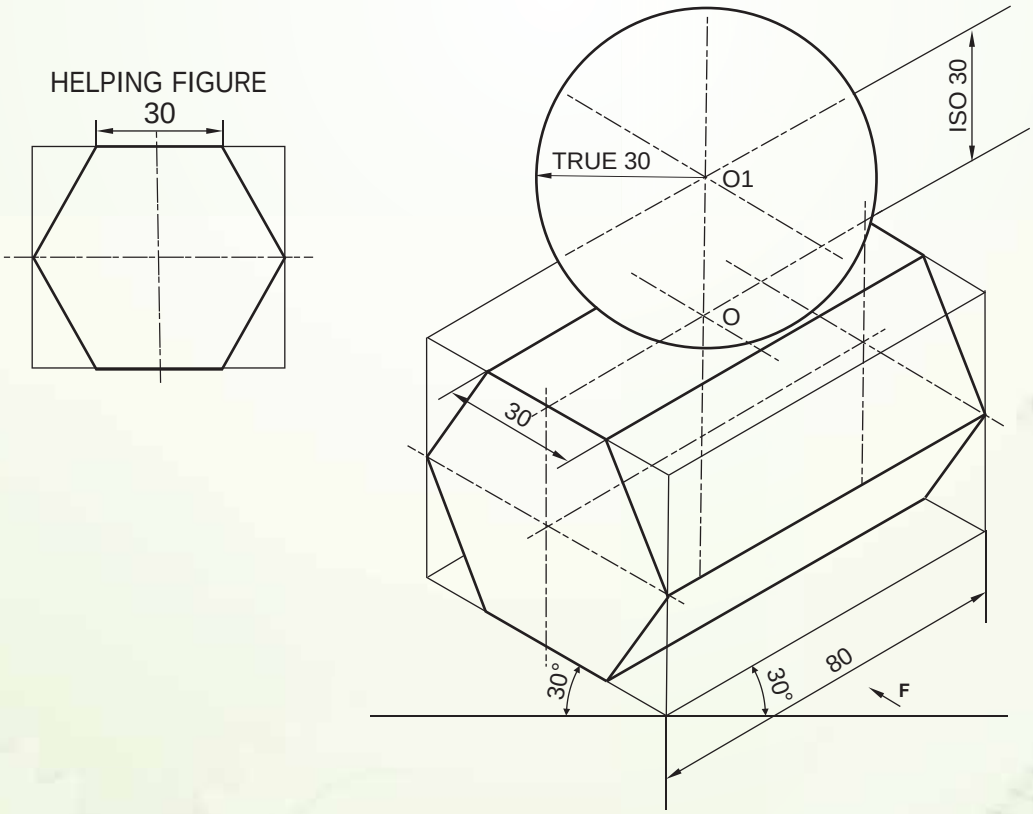

ISOMETRIC PROJECTION
Fig 1.35

Steps:

1. Draw an isometric projection of the horizontal box that encloses a hexagonal prism having rectangular face on top.
2. Indicate the centre of the top rectangular face with conventional lines.
3. Form the centre 'O' draw the axis equal to isometric radius of sphere to point 'O1'. From the centre 'O1' draw a full circle equal to true radius of sphere.
4. Join all the visible edges (no hidden lines) of the two solids by using thick lines.
5. Complete the isometric projection of the two solids with dimensioning, direction of viewing and their axes, as applicable, using conventional lines.

Example: 1.29 Draw an Isometric Projection of a right circular cone resting vertically and centrally on the top horizontal rectangle of a pentagonal prism having its axis parallel to H.P. and V.P. both. Side of pentagon = 34 mm, length of the prism = 80 mm, diameter of the cone = 44 mm and height of cone = 60 mm.

HELPING FIGURE

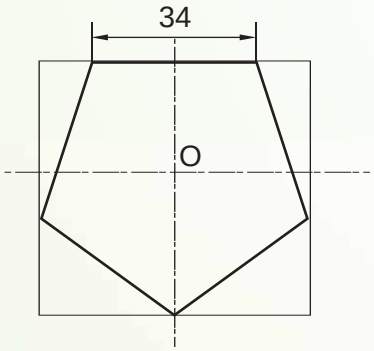

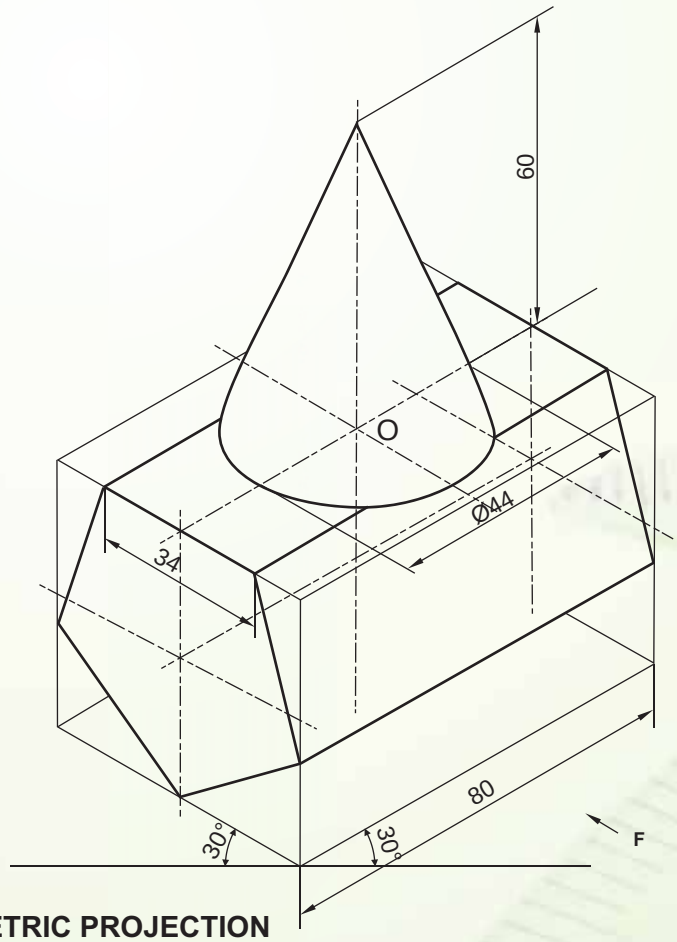

ISOMETRIC PROJECTION

Fig 1.36

Steps:

1. Draw an isometric projection of horizontal box that encloses a pentagonal prism having one rectangular face on top.
2. Indicate the centre of the top rectangular face with conventional lines.
3. Around the centre 'O' draw a rhombus of the circular base of cone. Using four centre method draw an ellipse inside. Draw the axis of cone from the centre of apex.
4. Join all the visible edges (no hidden lines) of the two solids by using thick lines.
5. Complete the isometric projection of the two solids with dimensioning, direction of viewing and their axes as applicable, using conventional lines.

Example: 1.30 Draw an Isometric Projection of a vertical regular hexagonal pyramid resting vertically and centrally having two of its base edges perpendicular to V.P.. On the top rectangular face of a horizontal square prism with its square ends perpendicular to V.P.. Side of the square = 50 mm, length of the prism =100 mm, side of the hexagon = 30 mm and height of the pyramid = 60 mm

HELPING FIGURE

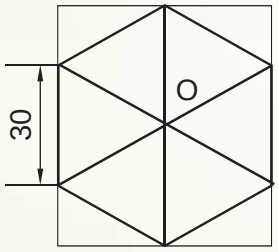

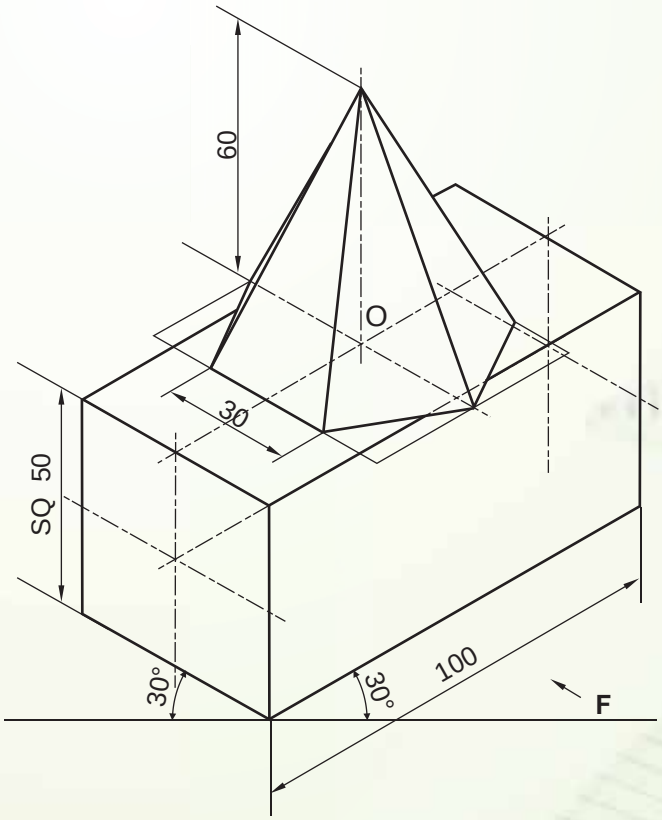

ISOMETRIC PROJECTION

Fig 1.37

Steps:

1. Draw an isometric projection of square prism in horizontal position.
2. Indicate the centre of the top rectangular face with conventional lines.
3. Around the centre 'O' draw hexagonal base of the pyramid. Draw the axis of the pyramid from the centre to the apex.
4. Join all the visible edges (no hidden lines) of the two solids by using thick lines.
5. Complete the isometric projection of the two solids with dimensioning, direction of viewing and their axes, as applicable, using conventional lines.

MORE TO DO

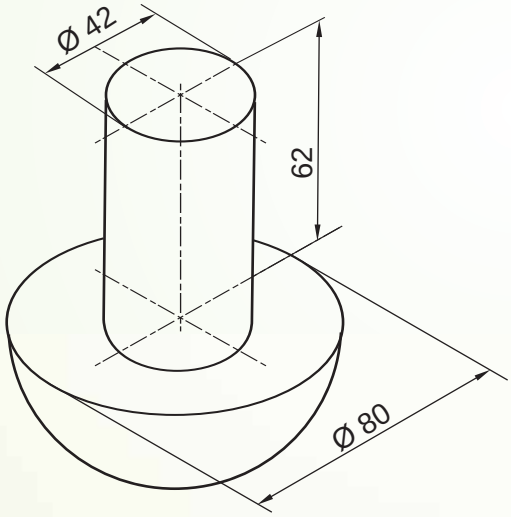

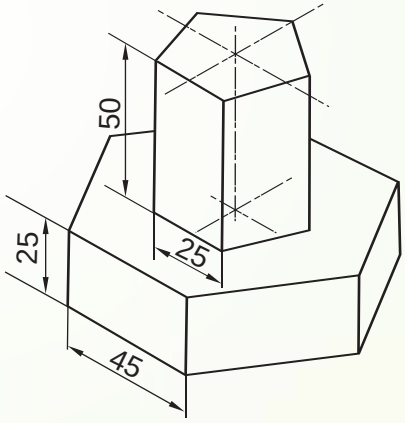

1. **BELOW:** HEMISPHERE

   ABOVE: CYLINDER

   COMMON AXIS: VERTICAL

2. **BELOW:** HEXAGONAL SLAB

   ABOVE: PENTAGONAL PRISM

   COMMON AXIS: VERTICAL

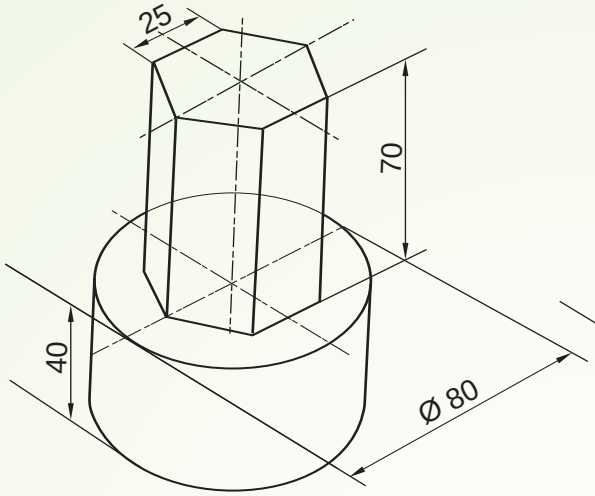

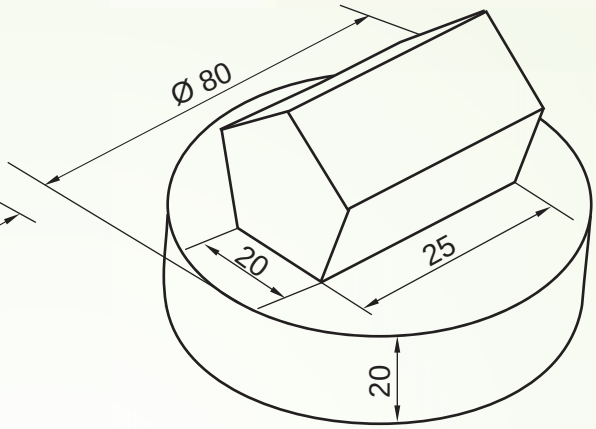

3. **BELOW:** CIRCULAR SLAB

ABOVE: HEXAGONAL PRISM

COMMON AXIS : VERTICAL

4. **BELOW:** CIRCULAR SLAB

ABOVE: PENAGONAL PRISM

AXIS: VERTICAL AND HORIZONTAL

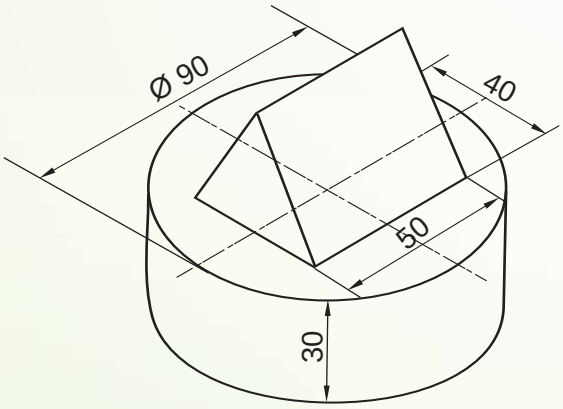

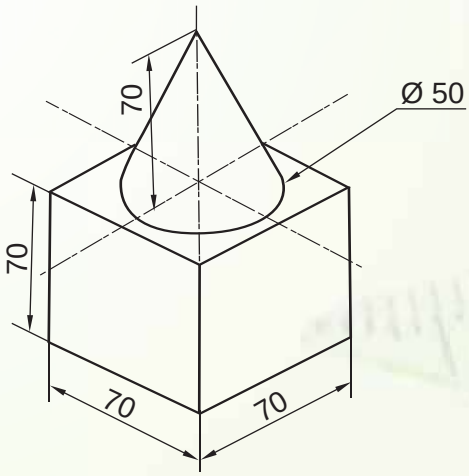

5. **BELOW:** CIRCULAR SLAB

ABOVE: EQUILATERAL TRIANGULAR PRISM

AXIS: VERTICAL AND HORIZONTAL

6. **BELOW:** CUBE

ABOVE: CONE

COMMON AXIS: VERTICAL

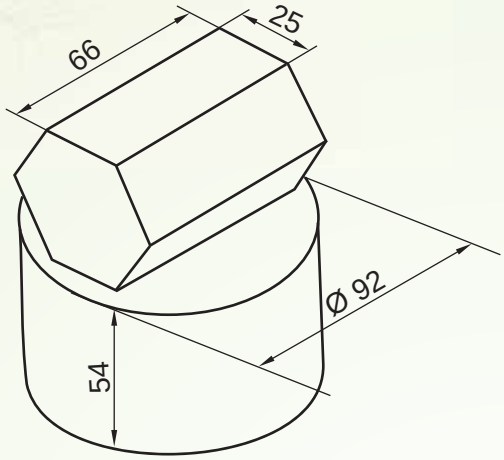

7. **BELOW:** CIRCULAR SLAB

ABOVE: HEXAGONAL PRISM

AXIS: VERTICAL AND HORIZONTAL

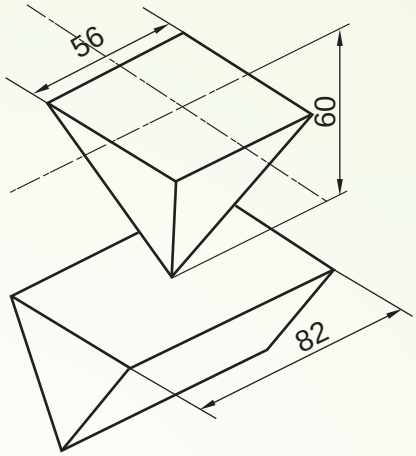

8. **BELOW:** EQUILATERAL HORIZONTAL TRIANGULAR PRISM

ABOVE: SQUARE PYRAMID

AXIS: HORIZONTAL AND VERTICAL

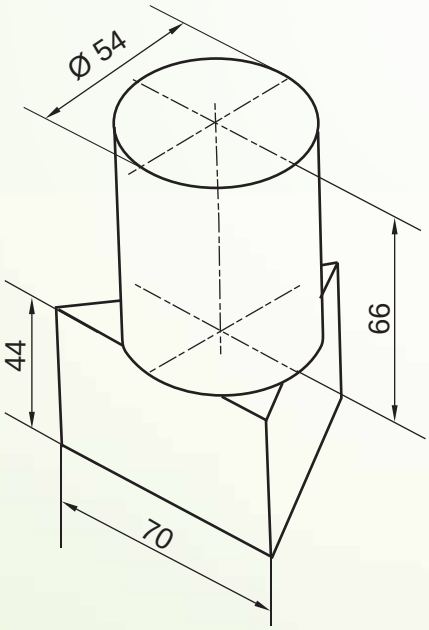

9. **BELOW:** EQUILATERAL TRIANGULAR SLAB

ABOVE: CYLINDER

COMMON AXIS : VERTICAL

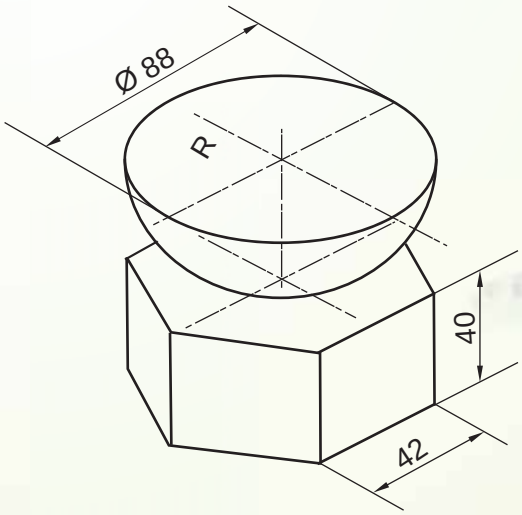

10. **BELOW:** HEXAGONAL SLAB.

ABOVE: HEMISPHERE

COMMON AXIS : VERTICAL

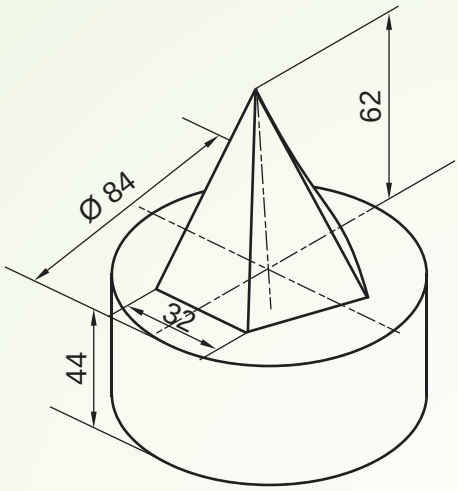

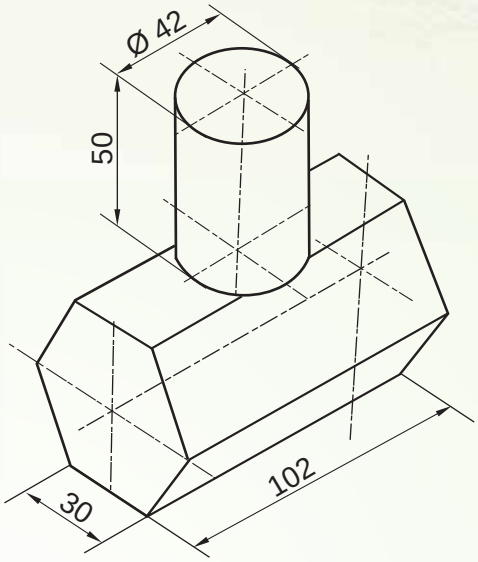

11. **BELOW:** CIRCULAR SLAB

ABOVE: PENTAGONAL AND PYRAMID

COMMON AXIS : VERTICAL

12. **BELOW:** HORIZONTAL HEXAGONAL PRISM

ABOVE: CYLINDER

AXIS: HORIZONTAL AND VERTICAL

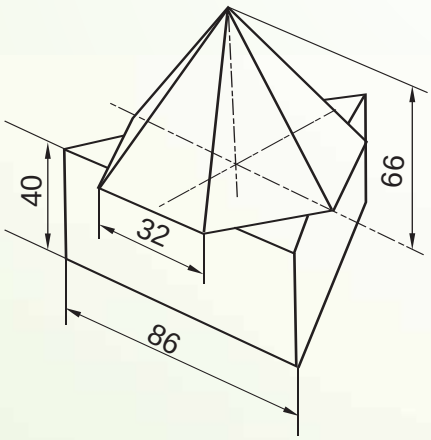

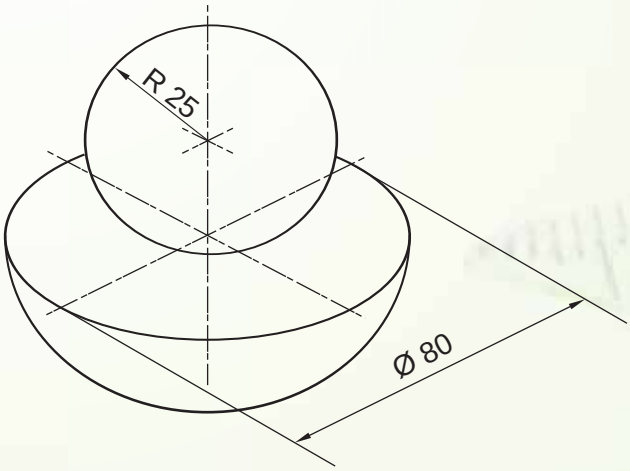

13. **BELOW:** EQUILATERAL TRIANGULAR SLAB

ABOVE: HEXAGONAL PYRAMID

COMMON AXIS : VERTICAL

14. **BELOW:** HEMISPHERE

ABOVE: SPHERE

COMMON AXIS : VERTICAL

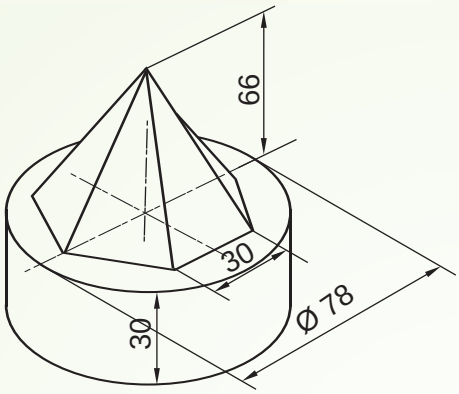

15. **BELOW:** CIRCULAR SLAB

ABOVE: HEXAGONAL PYRAMID

COMMON AXIS : VERTICAL

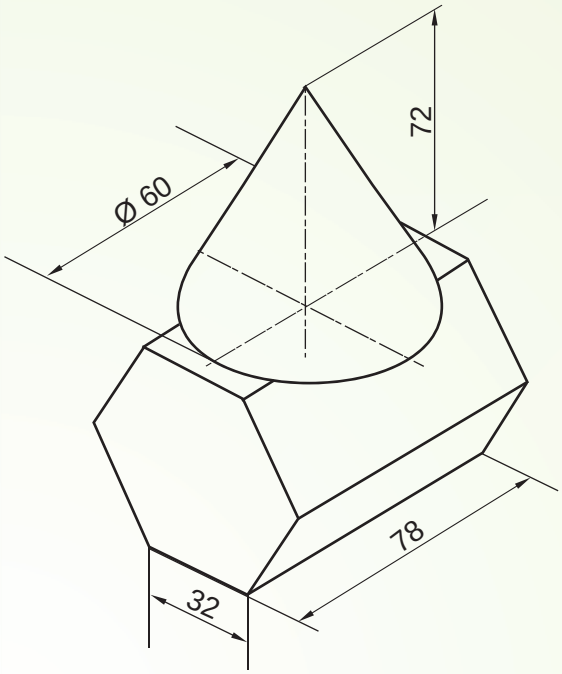

16. **BELOW:** HORIZONTAL HEXAGONAL PRISM

ABOVE: RIGHT CIRCULAR CONE

AXIS: HORIZONTAL AND VERTICAL

CHAPTER 2

MACHINE DRAWING

A. DRAWING OF MACHINE PARTS

2.1 INTRODUCTION

In our day to day life, we come across many objects where bolts and nuts are used to join two pieces together. For example we use wooden furnitures like desks, stools, tables etc. in school, showing bolts, nuts and screws. Such machine parts which are used to connect two pieces together are called as fasteners. There are two types of fasteners, viz, temporary fasteners and permanent fasteners. Threaded fasteners like bolt and nut are temporary fasteners. The process of joining different machine parts of machine or engineering products is called as fastening. Permanent fastening such as welding, riveting etc. join two parts together permanently and they cannot be separated without breaking the fastening, but in the case of temporary fastening, the parts are joined together temporarily and can be separated easily without breaking the fastening.

2.2 SCREW THREAD

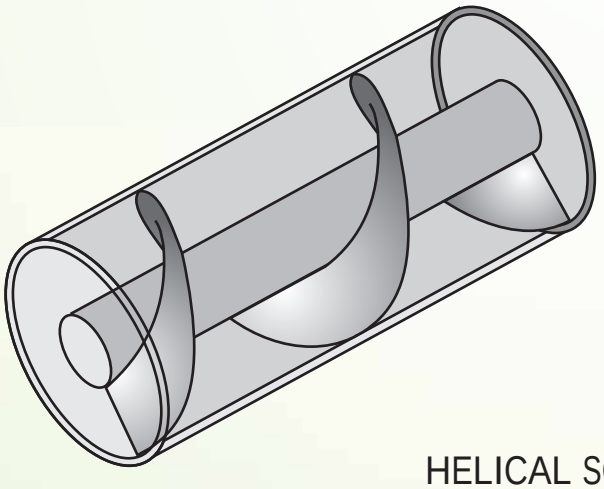

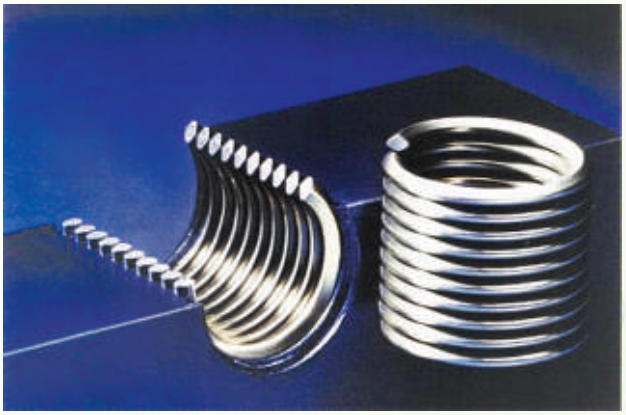

HELICAL SCREW THREAD

Fig 2.1 a

Recall that we have studied helix in class XI. A continuous helical groove cut along the outer circumference of a cylindrical surface is called a screw thread. A screw thread is an operating element of temporary fastening. Screw thread occurs on practically all engineering products. FIG.2.1 shows a screw thread/helical groove on a cylindrical rod.

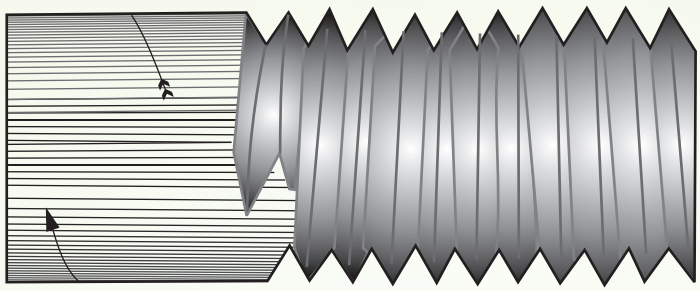

SCREW THREAD

Fig 2.1 b :

Screw threads are widely used for temporary fastening as well as for transmission of power from one machine parts to another

2.3 TERMS USED IN THREADS / SCREW THREADS

The various terms in connection with screw threads are given below. Refer Fig.2.2

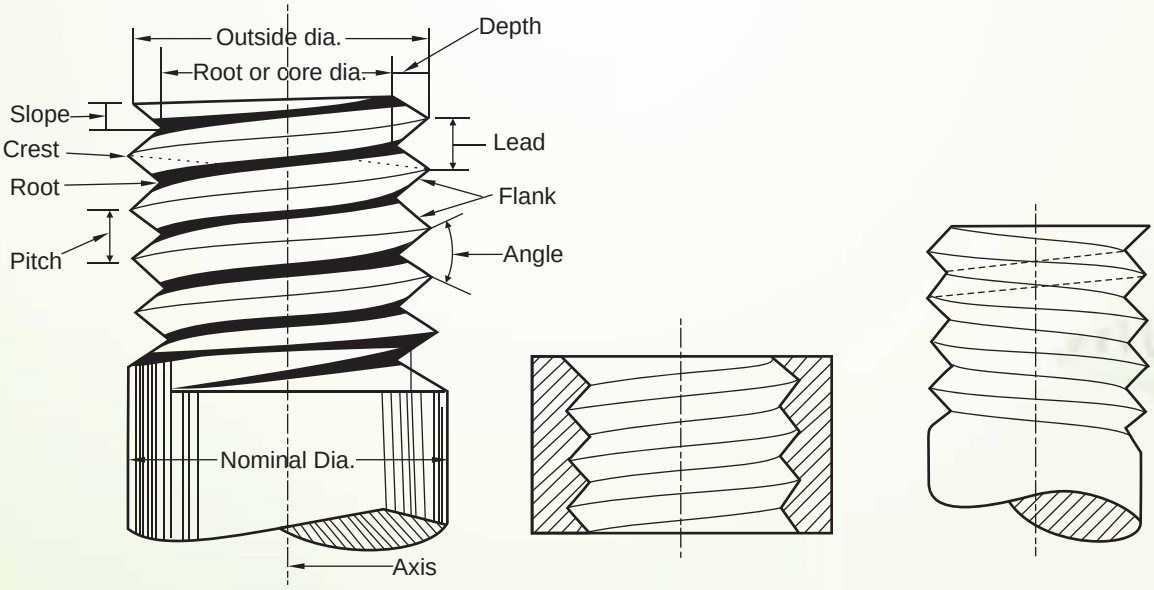

(A) EXTERNAL RIGHT HAND THREAD

(B) INTERNAL LEFT HAND THREAD

(C) EXTERNAL LEFT HAND THREAD

Fig.2.2

(i) EXTERNAL THREAD

It is a continuous helical groove or ridge cut along the external surface of the cylinder, e.g. threads on bolts studs, screws etc. FIG 2.2(a) shows an external thread.

(ii) INTERNAL THREAD

It is a thread on the internal surface of a hollow cylinder. FIG 2.2(b) shows the internal threads, e.g. threads of a nut.

(iii) SCREW PAIR

The bolt and nut together called as screw pair. One or more such pairs are used to join two parts.

(iv) PARALLEL AND TAPER THREAD

A thread formed on the surface of a cylinder is called as parallel or straight thread. Refer Fig 2.3(a)

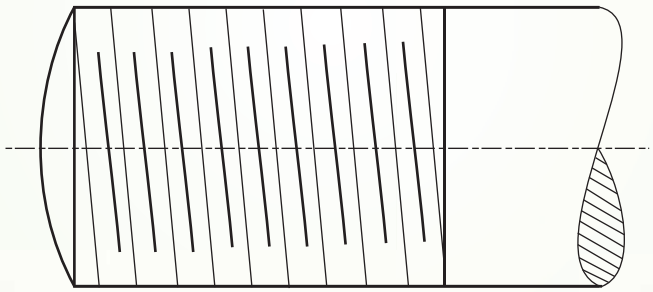

(A) PARALLEL THREAD

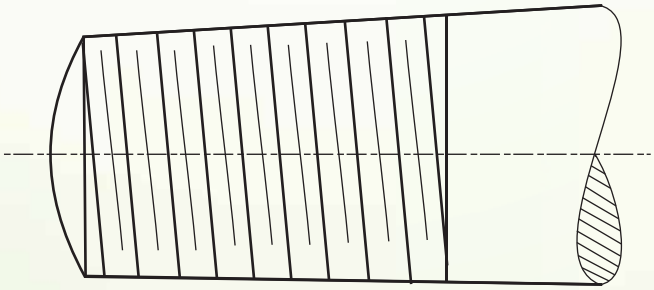

(B) TAPER THREAD

Fig 2.3

A thread formed on the surface of a cone called as taper thread. Refer FIG 2.3(b)

(v) RIGHT HAND AND LEFT HAND THREADS

Consider any nut and bolt. Hold the bolt firmly in left hand and rotate the nut clockwise by the right hand, the nut will screw on the bolt of the threads are right handed. It is abbreviated as RH thread. A left hand screws thread when assembled with a stationary mating bolt, screws off the bolt for clockwise rotation. It is abbreviated as LH thread.

Observe that mostly the bolts and nuts that we use in daily life have RH thread. Also we can observe that all the jewellery mating pieces have LH thread.

(vi) PITCH, P

It is "the distance between the corresponding points on the adjacent threads, measured parallel to the axis". Refer FIG2.2 (a)

(vii) LEAD,L

It is "the distance moved by a nut or bolt in the axial direction in one complete rotation".

(viii) SINGLE START AND MULTI START THREADS

When only one helix, forming the thread runs on a cylinder, it is called as single start thread. If more then one helices run on a cylinder, it is called as multi start threads.

i.e. L=P in the case of single start

L=2P in the case of double start

L=3P for triple start and so on.

(ix) CREST

It is the edge of the thread surface farthest from the axis, in case of external thread and nearest to the axis, in case of internal thread

(x) ROOT

It is the edge of the thread surface nearest to the axis in case of external thread and farthest from the axis, in case of internal thread.

(xi) FLANK

The surface connecting crest and root is called as flank.

(xii) THREAD ANGLE

It is "the angle between the flanks measured in an axial plane".

(xiii) MAJOR DIAMETER OR OUTSIDE DIAMETER

It is the diameter of an imaginary coaxial cylinder just touching the crest of external threads or roots of internal threads. It is the largest diameter of a screw thread.

(xiv) MINOR DIAMETER OR ROOT DIAMETER OR CORE DIAMETER

It is the diameter of an imaginary co-axial cylinder just touching the roots of external threads or crest of internal threads.

(xv) NOMINAL DIAMETER

It is the diameter of the cylinder from which external threads are cut out. The screw/bolt is specified by this diameter.

(xvi) FORM / PROFILE OF SCREW THREAD

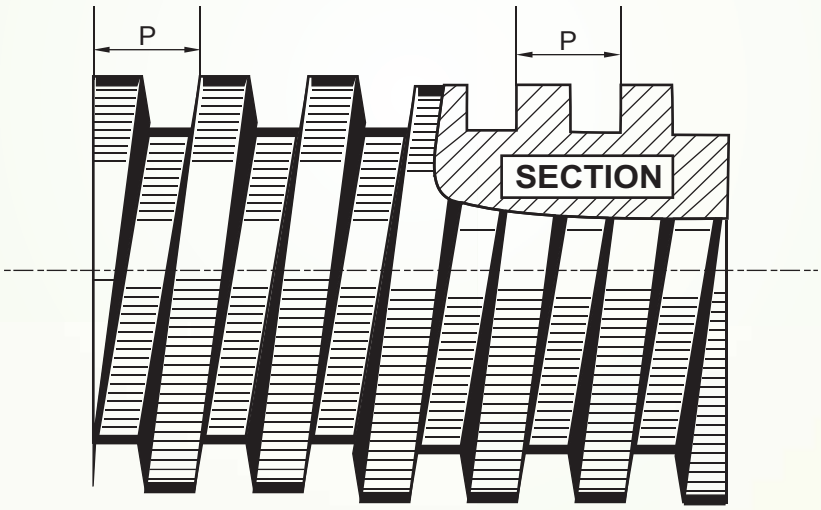

PROFILE OF SCREW THREAD

Fig 2.4

The section of a thread cut by a plane containing the axis is known as the form of the screw thread. It is also called the profile of the thread. Refer FIG 2.4

2.4 STANDARD PROFILE / FORM OF SCREW THREADS

There are two basic screw thread profiles. viz.

(a) Triangular or 'V' thread

(b) Square thread.

(a) TRIANGULAR OR 'V' THREAD

When the thread has a triangular or V-cross section, it is called as V-threads. All types of V-threads have inclined flanks making an angle between them. In the practical use of the threads, a clearance must be provided between the external and internal threads. V threads are used "to tighten two parts together" as in bolts and nuts, studs and nuts, screws etc.

For interchangeability between the screws and nuts of the same nominal diameter and form, various countries have standardized V-thread profiles. A few such standard thread forms are given in our syllabus namely

(i) B.S.W. thread

(ii) Metric thread

(b) SQUARE THREAD

When the thread has square cross section it is called as square thread. Flanks of square threads are vertical and parallel to each other. "square threads are used for power transmission" on feed mechanism of machine tools, screw jacks etc, when less friction means saving of power as they offer less frictional resistance. In our syllabus we are going to study about the standard profile/ form of a few square threads viz.

(i) Square thread

(ii) Knuckle thread

2.4.1 PROFILE OF B.S.W. THREAD

British standard whitworth (B.S.W.) thread is the most widely used form in British practice. Let us now learn to draw the standard profile of B.S.W. thread.

Example 1: Draw to scale 1:1, standard profile of B.S.W. thread, taking pitch = 40 mm. Give standard dimensions.

Solution

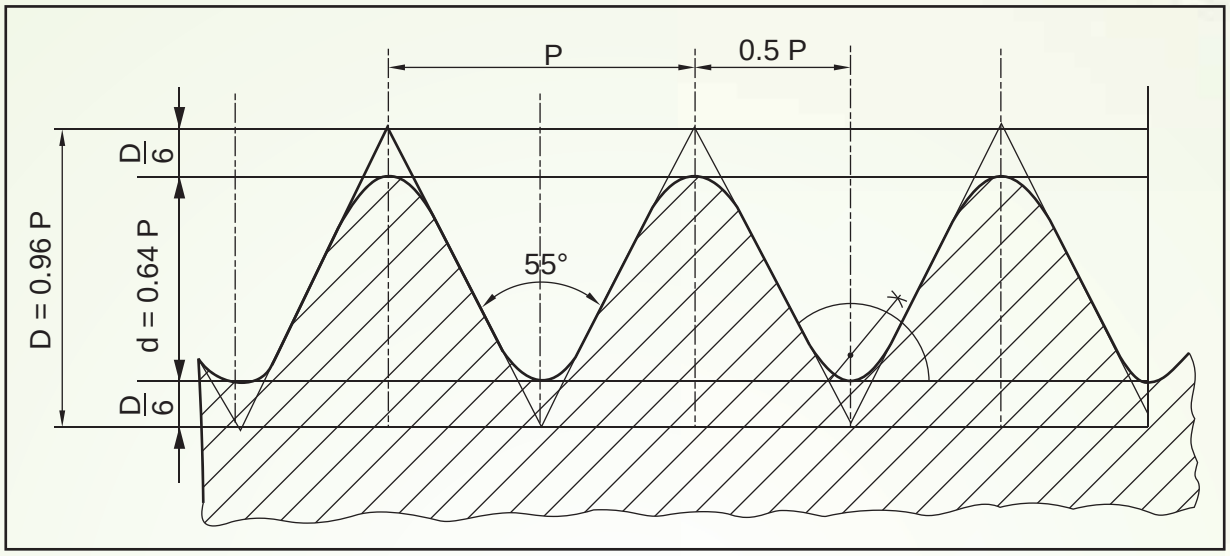

P	D	d	D/6
40	38.4	25.6	6.5

BRITISH STANDARD WHITWORTH THREAD (B.S.W. THREAD)

Fig 2.5

Steps Involved

(i) Draw vertical centre lines separated by the distance of P/2, (P/2=20 mm).

(ii) Draw two horizontal lines separated by a distance of major diameter D=0.96P.

(iii) One sixth of 'D' is cut off parallel to the axis of the screw at top and bottom, to draw the horizontals for minor diameter, d= 0.64P.

(iv) Draw the basic or fundamental triangles within the D lines, such that the angle between the flanks is 55°.

(v) Draw arcs at crest and roots, to make it round by any suitable method. The method is shown clearly in FIG 2.5, or radius of the arc can be taken as r= 0.137P.

(vi) Complete the profile and hatching is done as shown in FIG 2.5, to represent the external thread.

(vii) Standard dimensions are to be done as shown in the above figure.

2.4.2 METRIC THREAD

The Bureau of Indian standards (BIS) has recommended the adoption of ISO (INTERNATIONAL ORGANISATION FOR STANDARDISATION) profile with the metric screw thread system. In metric thread, the external and internal thread vary in shape. It can also be called as unified thread. In general, this ISO-metric thread will be specified using the basic designation. The basic designation consist of the letter M followed by the nominal size (major diameter in mm) and followed by the pitch in mm.

For example

M20 x 1.5 means the major diameter of the metric thread is 20mm and the pitch is 1.5mm. Let us now draw the standard profiles of metric screw thread

Example 2: Draw to scale 1:1, the standard profile of metric screw thread (external) taking enlarged pitch as 50mm. Give standard dimensions.

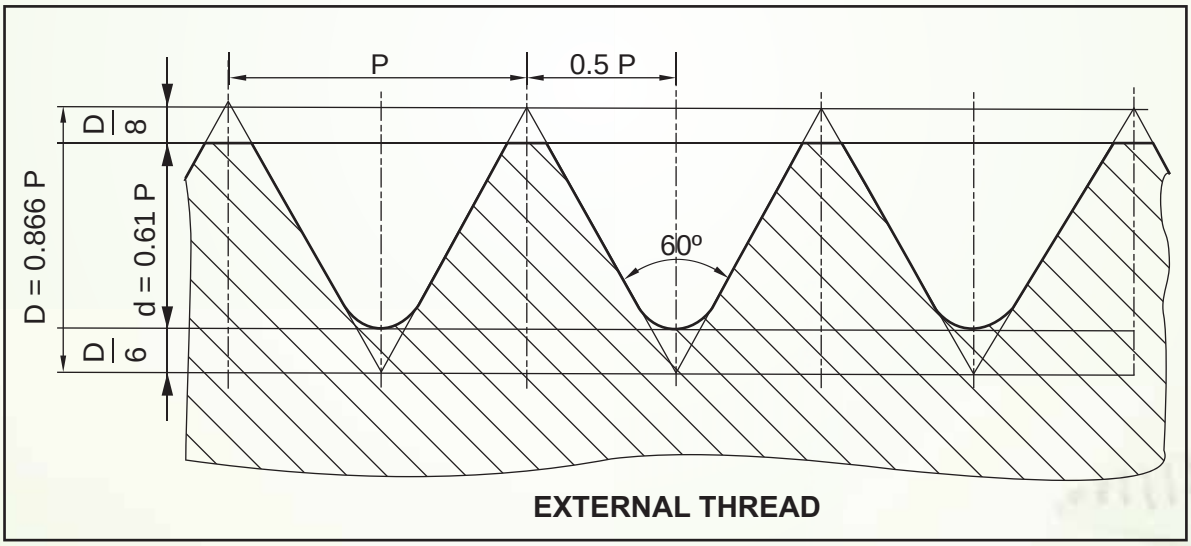

P	0.86P	0.61P	D/8	D/6
50	43	30.5	6.3	8.3

METRIC SCREW THREAD PROFILE

Fig 2.6

Solution:

(i) Draw vertical centre lines P/2 apart i.e. 50/2=25mm apart.

(ii) Draw horizontals to indicate D, D=0.866, apart.

(iii) Cut off one eighth of D at the top and one sixth of D at the bottom or draw horizontals to indicate d=0.61P with the 'D'.

(iv) Draw the slanting lines representing the sides of the thread. Here the angle between the flanks is 60°.

(v) Make the crest flat and roots round. Roots are made round by any suitable method.

(vi) Hatching is done as shown in fig.2.6. This lower hatched profile shows the basic form of the bolt.

(vii) Dimensioning is done as shown is FIG 2.6

Example 3 : Draw to scale 1:1, the standard profile of metric screw thread (internal) taking enlarged pitch as 50mm. Give standard dimensions.

Solution : Refer Fig 2.7

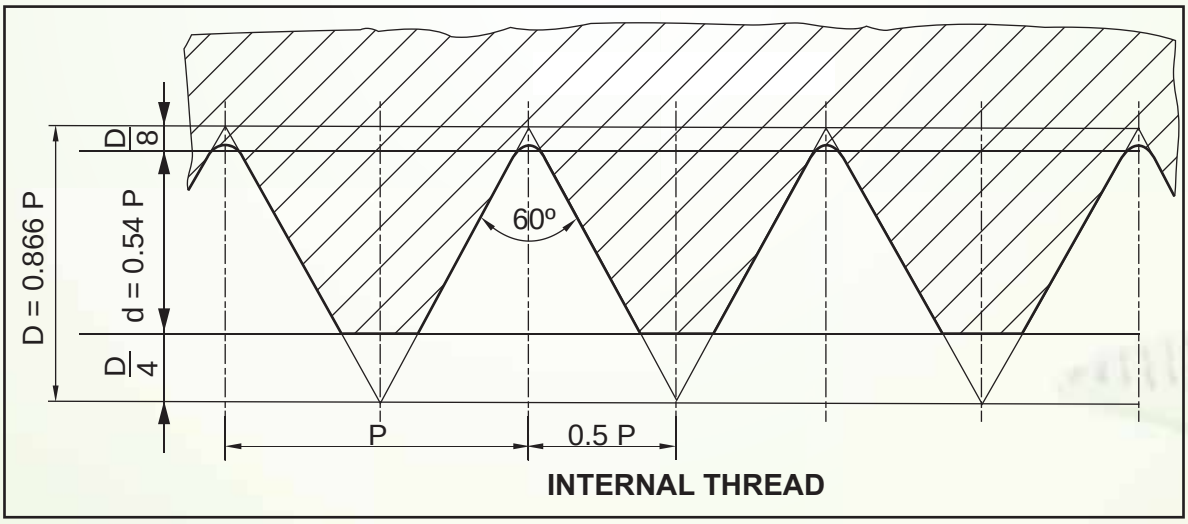

P	D=0.86P	d=0.54P	D/8	D/4
50	43	27	6.3	12.5

METRIC SCREW THREAD PROFILE

Fig 2.7

Steps involved are similar to the previous example. Here the upper hatched profile shows the basic form of nut.

2.4.3 SQUARE THREAD

Mechanisms of machine tools, valves, spindles, vice screws etc. are generally provided with square threads. A "square thread (SQ) is specified by nominal diameter and pitch". For example a square thread of nominal diameter = 40 mm and pitch = 4mm is designated as SQ 40x4

Let us now learn to draw the standard profile of a square thread, taking enlarged pitch as 60mm.

Solution : Refer Fig 2.8

Steps Involved

(i) Draw two horizontals, P/2 apart i.e. 60/2= 30mm apart.

(ii) Draw a number of perpendiculars, 30mm apart so as to have a row of squares.

(iii) Hatching and dimensioning is done as shown in fig 2.8

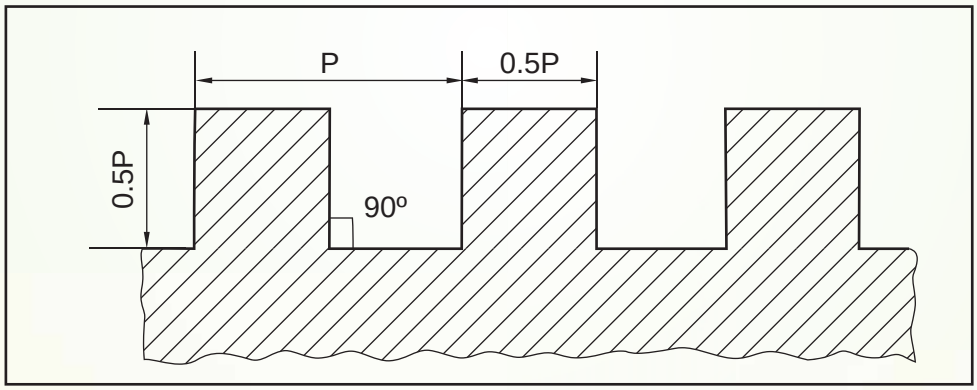

P	0.5P	ANGLE
60	30	90°

PROFILE OF SQUARE SCREW THREAD

Fig 2.8

2.4.4 KNUCKLE THREAD

Knuckle thread is a modified form of square thread. Knuckle thread is a special purpose thread. It is used in railway carriage coupling screws and on the neck of glass bottles.

Let us now draw the standard profile of Knuckle thread.

Example 5 : Draw to scale, 1:1, the standard profile of a Knuckle thread, taking enlarged pitch as 40mm

Solution : Refer Fig.2.10

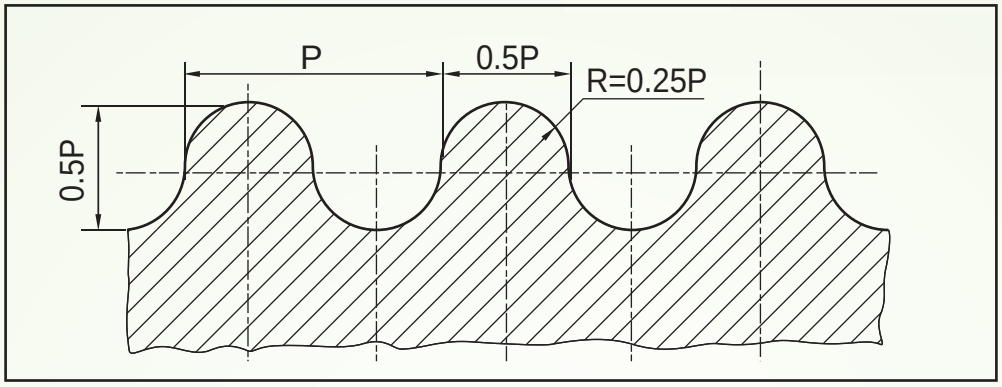

P	0.5P	0.25P
40	20	10

PROFILE OF A KNUCKLE SCREW THREAD

Fig 2.10

Steps Involved

(i) Draw a thin centre line.

(ii) On either side of the centre line draw a row of tangential semi circles as shown clearly in fig 2.10 Care should be taken in free flowing of semi circles into one another.

(iii) Hatching and dimensioning is done as shown in fig 2.10

Exercises

1. Draw to scale 1:1, the standard profile of BSW thread, taking enlarged pitch as 30mm. Give standard dimensions.
2. Draw to scale 1:1, the standard profile of metric thread (external) taking enlarged pitch as 60mm. Give standard dimensions.
3. Draw to scale 1:1, the standard profile of metric thread (internal) taking enlarged pitch as 60mm. Give standard dimensions.
4. Draw to scale 1:1, the standard profile of square thread, taking enlarged pitch as 60mm. Give standard dimensions.
5. Draw to scale 1:1, the standard profile of knuckle thread, taking enlarged pitch as 40mm. Give standard dimensions.

2.5 BOLTS

In day to day life, we can observe many machine parts joined by bolt and nut. Now, let us study about the bolts.

A bolt consists of a cylindrical body with one end threaded and the other end converted into a head. It is passed through clearance holes (diameter slightly more than nominal diameter of bolt) in two or more aligned parts. A nut is screwed on the threaded end of the bolt to tighten the parts together. Different types of bolts are used for different purposes. The shape of the head also depends upon the purpose for which the bolt is used. The length of a bolt is its total length, *"excluding the height or thickness of bolt head"*. Bolt has external thread. An external thread is represented by *"discontinuous, minor diameter circle"*.

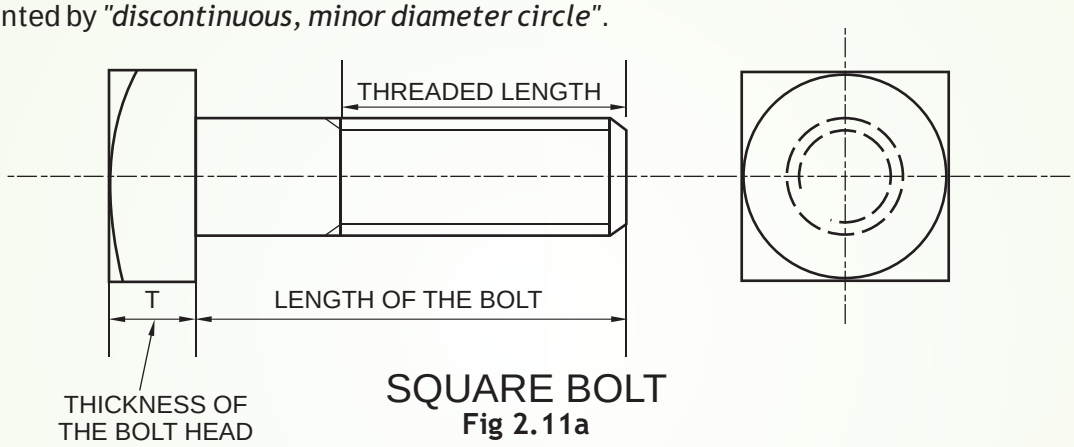

SQUARE BOLT
Fig 2.11a

We are going to study about the following types of bolts

(i) Hexagonal headed bolt

(ii) Square headed bolt

(iii) Tee headed bolt

(iv) Hook bolt

2.5.1 HEXAGONAL HEADED BOLT

It is the most commonly used form of the bolt. The head of a hexagonal head bolt is a hexagonal prism with a conical chamfer rounded off at an angle of 30° on the outer end face. All dimensions of a hexagonal head bolt and hexagonal nut are same except the height or thickness of the hexagonal head. The approximate height/thickness of the bolt head is 0.8d (d is the diameter of the bolt). A little portion (about 3 mm) of the threaded end should remain outside the nut.

Let us now learn to draw the views of a hexagonal headed bolt.

EXAMPLE 6: Draw to scale 1:1, the front view and side view of a hexagonal headed bolt of diameter 30mm, keeping the axis parallel to H.P and V.P. The length of the bolt is 120mm.

Solution: Refer Fig. 2.12a

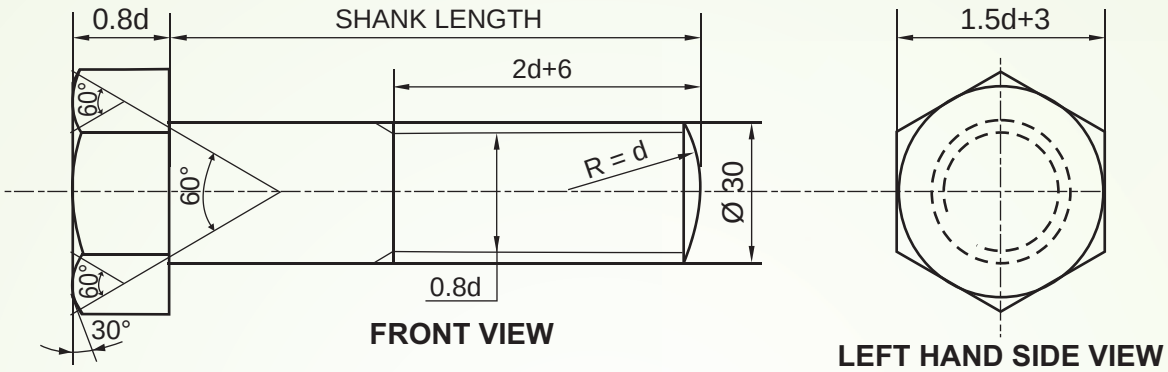

d	0.8d	1.5d+3	2d+6
30	24	48	66

HEXAGONAL BOLT

Fig 2.12a

Steps Involved

(i) "Start with the view where circles are seen". Here the side view shows the circles representing the shank. So, start with the side view.

(ii) Draw a circle of given diameter, d= 30mm

(iii) Draw another circle of diameter 0.8d (24mm), which is shown as broken/discontinuous circle. (Broken part is shown in III quadrant) 'This inner broken circle indicates that the thread on the bolt is an external thread'.

(iv) Draw another circle of diameter 1.5d+3 mm (48 mm) indicate the chamfering circle.

(v) Circumscribe hexagon around the chamfering circle as in Fig. 2.12b using 30°-60° degree set square and minidrafter.

(vi) After completing the side view, the front view will be drawn by taking projections. Project the shank diameter (d= 30 mm) from the side view. Draw a rectangle of size 30x120 mm for the shank (120 mm is the length of the shank)

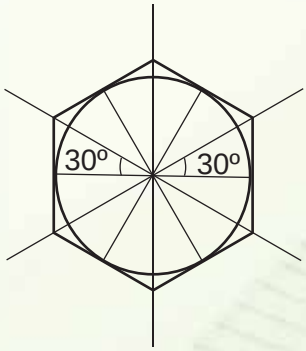

Fig 2.12 b

(vii) The end of the bolt is rounded and is done with the radius equal to the diameter of the bolt. (R = d = 30mm)

(viii) Indicate the threaded portion (by projecting the 0.8d = 24mm circle with "thin continuous lines") at the end of the shank for the length of 2d+6 mm =66mm

(ix) Draw the head of the bolt in the front view, by projecting the hexagon from the side view. Size A/C (across corners) will be projected to get the width of the head. Height of the head is taken as 0.8d= 24mm.

(x) The three faces of the hexagonal head with chamfering arcs is drawn by any of the appropriate method.

(xi) The centers of chamfering arcs for the three faces may be located as shown in the Fig 2.12a

Keep in your mind that, on elevation showing "three faces" of the hexagonal head, show the upper corners of the head chamfered. On elevations showing "two faces" of the hexagonal head, show the upper corners square.

2.5.2 SQUARE HEADED BOLT

It is also the common form of the bolt and is generally used where the head of the bolt is to be accommodated in a recess. The recess itself is in the form of square in which the head rests having a little clearance. "The square recess prevents the head from rotating" when the nut is screwed on or off. When the square head of the bolt projects outside the parts to be joined, it is provided with a square nut. The dimensions of the square head are as those of the square nut "except the height or thickness"

Fig 2.13

Let us now learn how to draw the views of a square headed bolt.

Example 7 : Draw to scale 1:1 the Front view and Plan of a square head bolt when it axis is perpendicular to H.P. Take the diameter of the bolt as 24mm, and length as 110 mm.

Solution : Refer Fig 2.14

Steps Involved

(i) Since the circles are seen in the top view, start with the top view. Draw a circle of diameter, d= 24 mm.

(ii) Within the'd' circle, draw an another discontinuous/broken circle of diameter = 0.8d say 19.2 mm to the bolt.

(iii) Draw the chamfering circle of diameter =1.5d+3 mm, say 39 mm.

(iv) Circumscribe square around the chamfering circle.

(v) Project the Front view from the top view. Construct a rectangle of size Ød x length of the bolt, 24x110mm. The end of the bolt is rounded and is done with the radius equal to the diameter of the bolt. (R = d = 24 mm) Indicate the threaded portion at the end of the shank for the length of 2d+6 mm = 54 mm.

(vi) Bolt head is drawn by projecting the front view. Construct a rectangle of (1.5d+3)x0.8d say 39x19.2 mm.

(vii) Chamfering arc is drawn with radius of R = 2d = 48 mm.

(viii) All the standard dimensions are given as shown in the Fig. 2.14

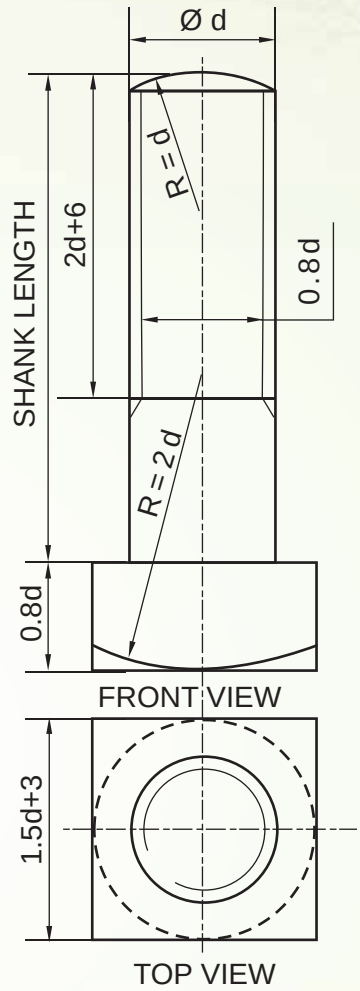

d	0.8d	1.5d+3	2d+6	2d
24	19.2	39	54	48

SQUARE BOLT

Fig. 2.14

2.5.3 T-BOLT

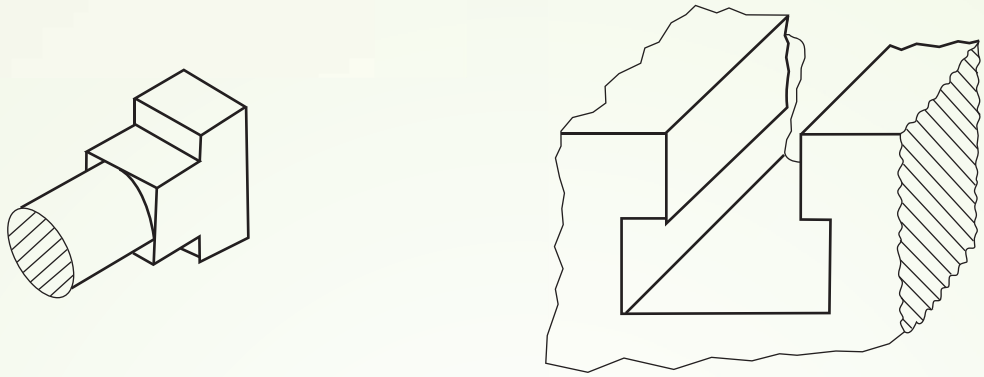

(I) T-BOLT (II) T-SLOT

Fig 2.15

The head of this bolt is just like the English alphabet 'T' Fig 2.15(i). It is "used in machine tool tables". Corresponding T-slots are cut into the table [see Fig 2.15 (ii)] to accommodate the T-head of the bolt. A square neck is usually provided with the head.

Example 8 : Draw to scale 1:1, the front view and side view of a T-Headed bolt of diameter 20mm. Keep the axis parallel to V.P and H.P.

Solution: Refer Fig. 2.16

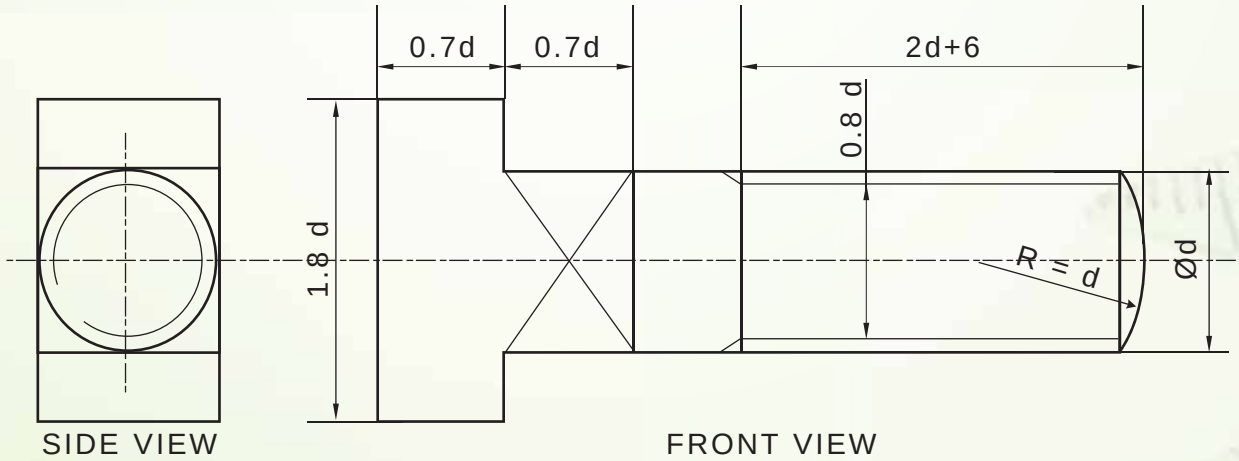

d	0.7d	0.85d	1.8d
20	14	17	36

T-HEADED BOLT

Fig. 2.16

Steps Involved

(i) Start with the side view where circles are seen. Draw outer and inner circle of diameter, d= 25 mm and 0.8d= 20 mm respectively, with inner circle discontinuous or broken.

(ii) Then the front view is drawn with the shank and bolt head as shown clearly in the Fig. 2.16

Observe that the square cross section is shown by drawing thin cross lines

(iii) Then complete the side view by projecting the T-head.

(iv) Dimensioning is done as shown in the Fig. 2.16

2.5.4 HOOK BOLT/J-BOLT

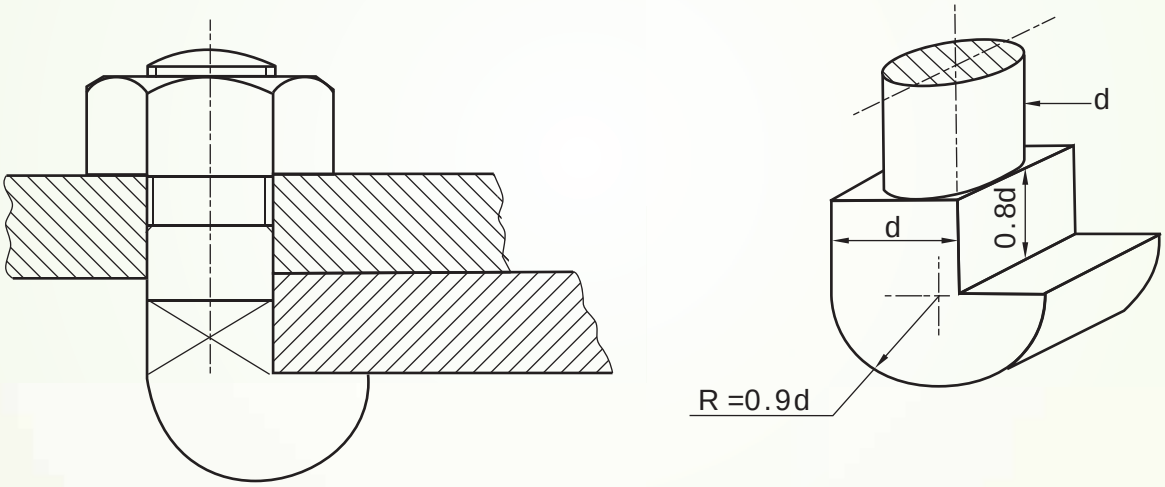

(a) J-BOLT IN POSITION **(b) PICTORIAL VIEW OF A J BOLT**

HOOK BOLT / J-BOLT

Fig 2.17

Fig 2.17(b) shows the pictorial view of a hook bolt. It is segment of a circular plate form of the bolt of which the head projects only in the side of the shank. The shank of the bolt passes through a hole in one part only. The other part to be joined comes under the head of the bolt. A hook bolt is usually provided with a square neck to prevent its rotation while tightening.

Example 9 : Draw to scale 1:1, the front view and plan of hook bolt with diameter 20 mm, keeping the axis vertical. Give standard dimensions.

Solution : Refer Fig 2.18

Steps Involved

(i) Start with the view having circles. Here start with the top view. Draw centre lines and draw outer and inner circle of diameter d= 20mm and 0.8d= 16mm respectively. To indicate the external thread of the bolt, 0.8d circle is drawn broken.

(ii) Complete the shank portion of the front view as shown clearly in the Fig. 2.18

(iii) Head portion of the front view is complete and the square cross section is shown as thin cross lines.

(iv) Complete the hook portion of the top view by projecting the front view.

(v) Dimensioning is done as shown in the Fig 2.18

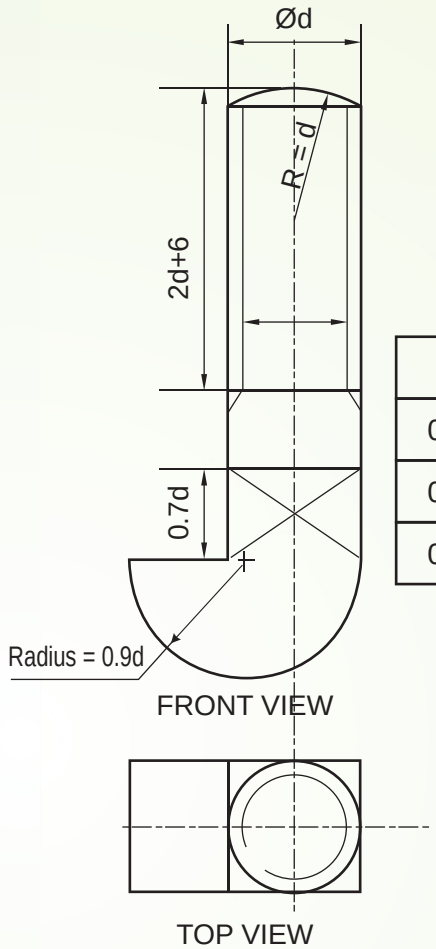

d	20
0.7d	14
0.8d	16
0.9d	18

HOOK BOLT / J-BOLT

Fig 2.18

Exercises

NOTE: Assume missing dimensions proportionately

1. Draw to scale 1:1, the Front view, Top view and side view of a hexagonal head bolt of diameter 24mm, keeping the axis parallel to H.P and V.P. The two opposite sides of the hexagonal head is parallel to V.P. The length of the bolt is 120 mm.

2 Draw to scale 1:1, the Front elevation and Side view of a hexagonal headed bolt of diameter 20mm, keeping the axis parallel to V.P and H.P. Give standard dimensions.

3 Draw to scale 1:1, the Front elevation and Plan of a hexagonal head bolt of M3O size, keeping the axis vertical. Give standard dimensions.

4 Draw to scale 1:1, the Front view and Side view of a hexagonal headed bolt of diameter 24mm, keeping the axis parallel to V.P and H.P. Two opposite sides of the hexagonal head is perpendicular to V.P. Take the following dimensions.

Length of the bolt = 120mm

Threaded length of the bolt = 80mm

5 Draw to scale full size, the Front view, Top view and Side view of a square head bolt of diameter 24mm, keeping its axis horizontal.

6 Draw to scale 1:1, the Elevation and Plan of a square head bolt of diameter 30mm, when its axis is perpendicular to H.P. Give standard dimensions.

7 Draw to scale 1:1, the Front view and Side view of a T-head bolt of diameter 20mm. keep the axis of the bolt parallel to V.P and H.P.

8 Draw to scale 1:1, the Front elevation and Plan of a tee head bolt of diameter 24mm, keeping the axis perpendicular to H.P.

9 Draw to scale full size, the Elevation and Plan of a hook bolt with diameter = 20mm, keeping the axis vertical. Give standard dimensions.

10 Draw to scale 1:1, the Front view, Side view of a hook bolt with diameter 25mm, when its axis parallel to V.P and H.P. Give standard dimensions.

2.6 NUTS

A nut is a machine element having a threaded hole that engages with the threaded end of the bolt. There are different types of nuts in use. In our syllabus, we are going to study about hexagonal nut and square nut.

2.6.1 HEXAGONAL NUT

Refer Fig 2.19

The most commonly used type of nut is the hexagonal nut. It is a hexagonal prism provided with a threaded hole. Upper corners of a nut are "chamfered" or "rounded- off". Chamfering is done to remove sharp corners to ensure the safety of the user. The angle of chamfer is usually "30° with the base of the nut". The chamfering gives arcs on the vertical faces of the nut and circle on the top surface of the nut. The chamfering circle on the top surface touches the mid points of all the side of the nut which can be seen in the top view.

Fig 2.19

Let us now learn to draw the views of a hexagonal nut.

Example 10 : Draw to scale 1:1, the front view, top view and side view of a hexagonal nut of size M30, keeping the axis perpendicular to H.P. Give standard dimensions.

Solution Refer Fig 2.20

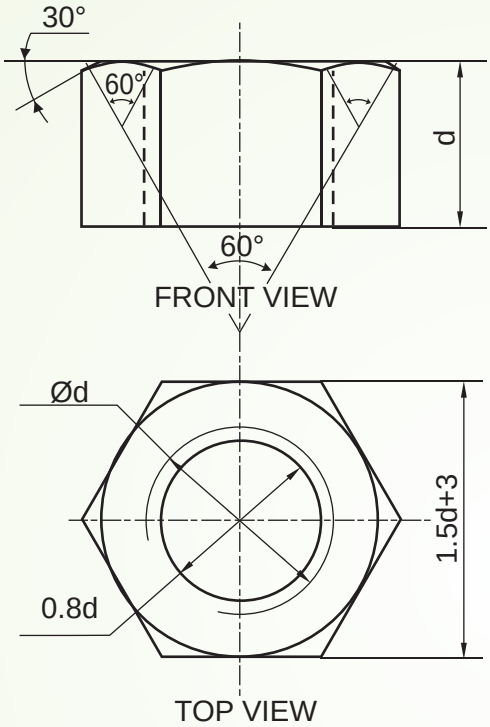

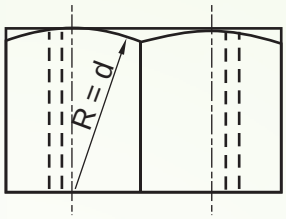

LEFT HAND SIDE VIEW

d	30
0.8d	24
1.5d+3	48

NOTE : The size of chamfer circle can be taken 1.5d or 1.5d+3 in square / hex. head bolt and nut.

HEXAGONAL NUT

Fig 2.20

Steps Involved

(i) Start with the top view, where circles are seen. Draw a circle of diameter d = 30mm. Describe this circle as discontinuous circle to indicate the internal thread of a nut.

(ii) Draw an another circle of diameter 0.8d = 24mm

(iii) Draw the third circle which is of chamfering circle of diameter 1.5d+3 = 48mm.

(iv) Circumscribe a hexagon around the chamfering circle using the 30°- 60° degree set square and mini drafter as shown in fig 2.21.

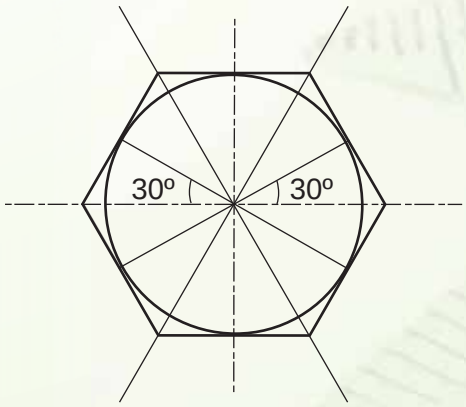

HEXAGONAL NUT

Fig 2.21

(v) Project the top view to get front view. Front view has three faces if nut is placed across corner (A/C) and front view has two faces if the nut is placed across flats (A/F). This is the common position for the nut.

(vi) Chamfering arcs in the front view may be done by any suitable method. One of the methods is clearly shown in figure 2.20.

The alternate method is given below for your reference.

- On the front view, describe arc ABC [fig.2.22] of radius 1.2d = 3mm. It cuts the verticals in A and C. Here d = 25mm.
- Bisect the chord between D and A and between C and E.
- On the bisectors we shall expect to find the center of the arcs which flow through DKA and CE.
- Join DK and bisect at right angles, thus locating the center of arc DKA.

Note that arc CE will also have the same radius.

(vii) Side view is projected from front view and top view. Side view and front view have same height but different width.

(viii) Give the standard dimensions as shown in fig 2.20.

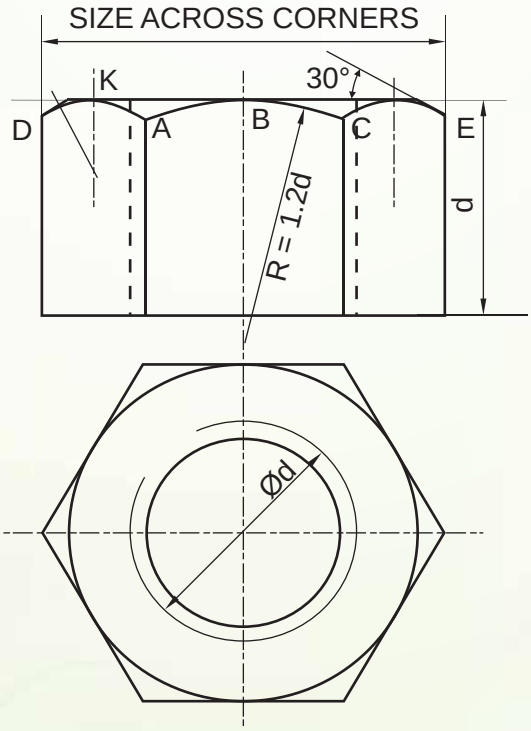

d	25
1.2d	30
1.5d+3	40.5

HEXAGONAL NUT

Fig 2.22

2.6.2 SQUARE NUTS

SQUARE NUTS

Fig 2.23

A square nut is also one of the main forms of nuts. It is a square prism provided with a threaded hole. The upper corners of a square nut are chamfered in the same way as of hexagonal nut. Now, let us learn to draw the view of a square nut.

Example 11: Draw to scale 1:1, the Front elevation and Plan of a square nut of diameter 25mm, keeping its axis vertical and two of the opposite edges of the square face parallel to V.P.

Solution: Refer Fig 2.24

Steps Involved

(i) Start with the top view. With same point as center, draw three circles of diameter d = 25 mm, 0.8d = 20 mm, 1.5d =37.5 mm respectively.

Indicate the internal thread of the nut by drawing Ød circle discontinuous.

(ii) Circumscribe square around the chamfering circle of diameter 1.5d (37.5 mm)

(iii) Project the top view to get the front view. Front view is a rectangle of size (1.5dxd) 37.5x25 mm.

(v) Chamfering arc in the front view is drawn with the radius R = 2d = 50 mm.

NOTE: that if one face the square nut is seen in the front view, make the corners squared. (at 90° degree)

(v) Dimensioning is done as shown in Fig. 2.24

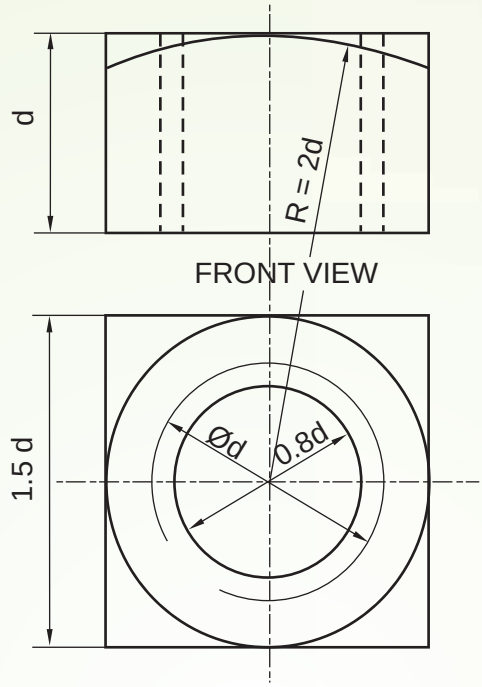

d	25
0.8d	20
1.5d	37.5

SQUARE NUT ACROSS FLAT

TOP VIEW

Fig 2.24

Example 12 : Draw to scale full size the Front View and Top View of a square nut of diameter 25mm, keeping its axis vertical with the diagonal on the square face parallel to V.P.

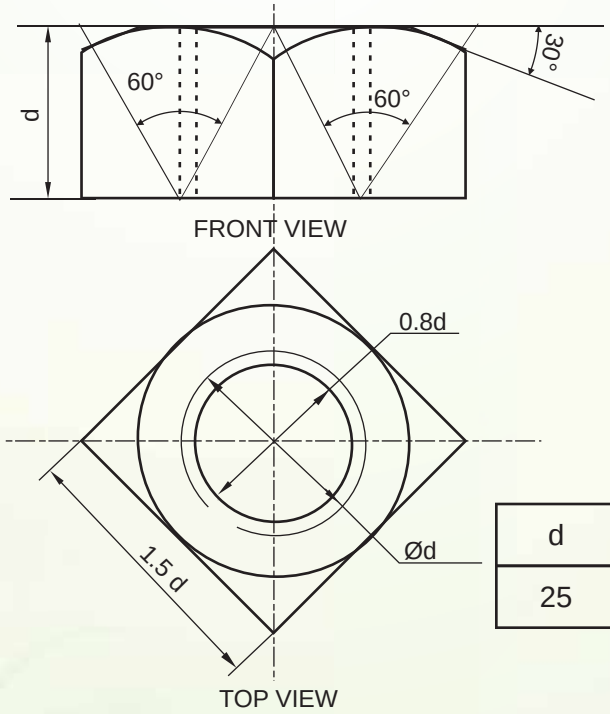

d	0.8d	1.5d
25	20	37.5

SQUARE NUT ACROSS CORNER

Fig 2.25

Solution : Refer Fig. 2.25

Steps Involved :

(i) Start with the top view. Describe three circles of diameter d = 25mm, 0.8d = 20mm, 1.5d = 37.5mm respectively. (Ød circle is broken to represent the internal thread of the nut.)

(ii) Circumscribe square around the chamfering circle as shown in Fig 2.25

(iii) Project the Top View to draw the Front View

(iv) Complete the Front View as shown in Fig. 2.25.

NOTE: that when two faces of square nut are seen in front view, the corners are chamfered.

ADDITIONAL INFORMATION

The hexagonal nut takes preference over the other nuts. A spanner is used to turn the nut on or off the bolt. The jaws of the spanner come across the opposite flats of the nut. The angle through which the spanner will have to be turned to get another hold is only 60 in case of a hexagonal nut but 90° for a square nut. Though the angle is 45 in case of the octagonal nut, it is rarely used due to its complicated process of construction. So, it is more convenient to screw on a hexagonal nut than a square nut in a limited space for turning the spanner.

Exercises :

NOTE : Assume missing dimensions proportionately

1. Draw to scale 1:1, the front elevation and plan of a hexagonal nut keeping axis vertical, when two of the opposite sides of the hexagon are parallel to V.P. Give standard dimensions.

2. Draw to scale 1:1, the Plan and Front View of a hexagonal nut, taking nominal diameter of the bolt = 30mm, keeping the axis perpendicular to H.P and two opposite sides of the hexagon perpendicular to V.P. Give standard dimensions.

3. Draw to scale 1:1, the Front View and Plan of square nut, taking nominal diameter = 30mm, keeping the axis perpendicular to H.P and two opposite sides of the square parallel to V.P. Give standard dimensions.

4. Draw to scale 1:1, the Front View and Top View of a square nut, taking nominal diameter =30mm, keeping the axis perpendicular to H.P and two opposite sides of the square perpendicular to V.P. Give standard dimensions.

5. Draw to scale 1:1, the front view and plan of a square nut, taking d = 30mm, keeping the axis perpendicular to H.P and the diagonal of the square face parallel to V.P. Give standard dimensions.

2.7 WASHER

You must have seen the circular plate called washer fitted in your mini drafter. Even, in jewellery item like ear tops/studs, washer may be used to tighten the screw. There are two main kinds of washer used in machinery, namely

(i) Plain washer.

(ii) Spring washer.

We are going to study only about the plain washer in our syllabus.

2.7.1 PLAIN WASHER

A plain washer see fig. 2.26 is a circular plate having a hole in its centre. It is placed below the nut to provide "a flat smooth bearing surface". The use of a washer is recommended where the surface of the machine part is rough for a nut to seat. Washer also prevents the nut from cutting into the metal thus allowing the nut to be screwed more tightly.

WASHER
Fig 2.26

Example 13: Draw to scale 1:1, the front view and top view of a washer, taking the nominal diameter of the bolt on which the washer is used = 25mm. Keep the circular face of the washer parallel to V.P

Solution: Refer Fig 2.27

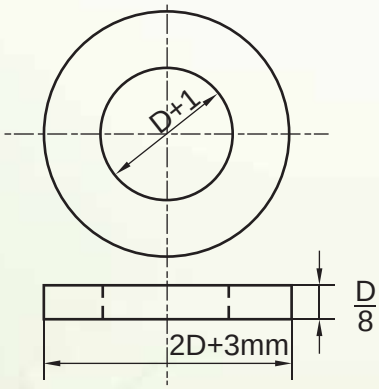

D	2D+3	D/8
25	53	3

PLAIN WASHER
Fig 2.27

Steps Involved

(i) Start with the Front View, which comprises two circles with diameter D+1 = 26mm, 2D+3 = 53mm.

(ii) Project the front view to get the Top View which is a rectangle of size, [(2D+3) x D/8], 53x3 mm. Complete the Top View as shown in the Fig 2.27

2.8 COMBINATION OF BOLT, NUT AND WASHER FOR ASSEMBLING TWO PARTS TOGETHER

In common machineries used at home, we might have observed the assembly of bolt, nut and washer to connect two parts together. See Fig 2.28

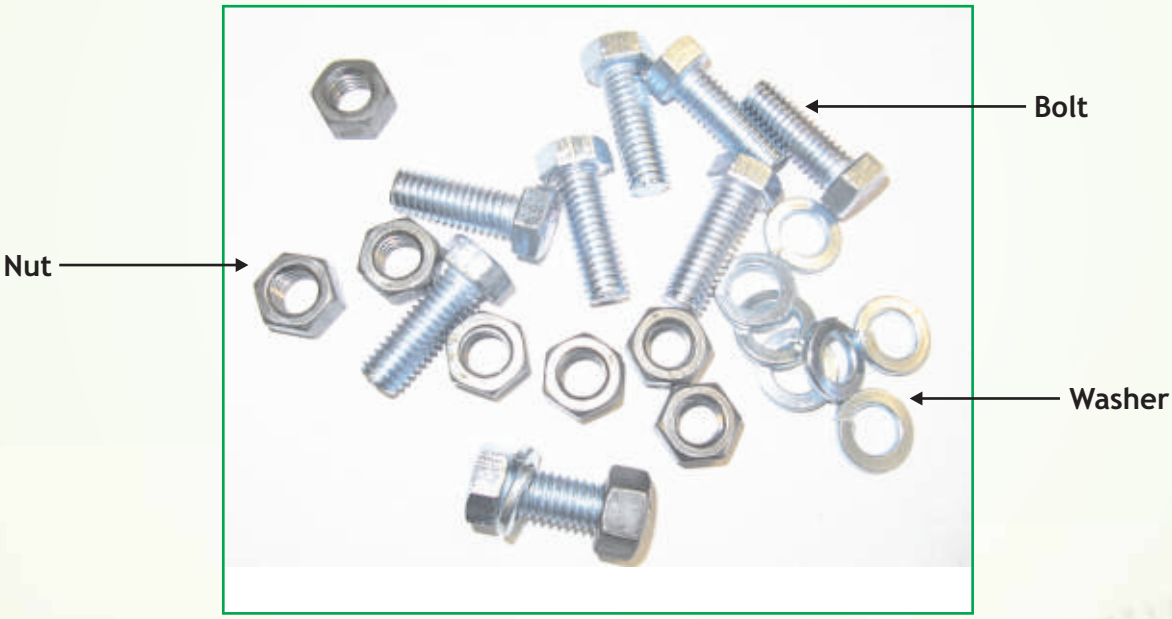

NUT, BOLT AND WASHER

Fig 2.28

In the earlier topics, we learnt how to draw the views of bolt, nut and washer separately. Here, we expect to understand the views of the assembly of bolt, nut and washer.

Example 14: Draw to scale 1:1, the Front View, Top View and side view of a hexagonal headed bolt of diameter 25mm with hexagonal nut and washer, keeping the axis parallel to V.P and H.P

Solution: Refer Fig 2.29

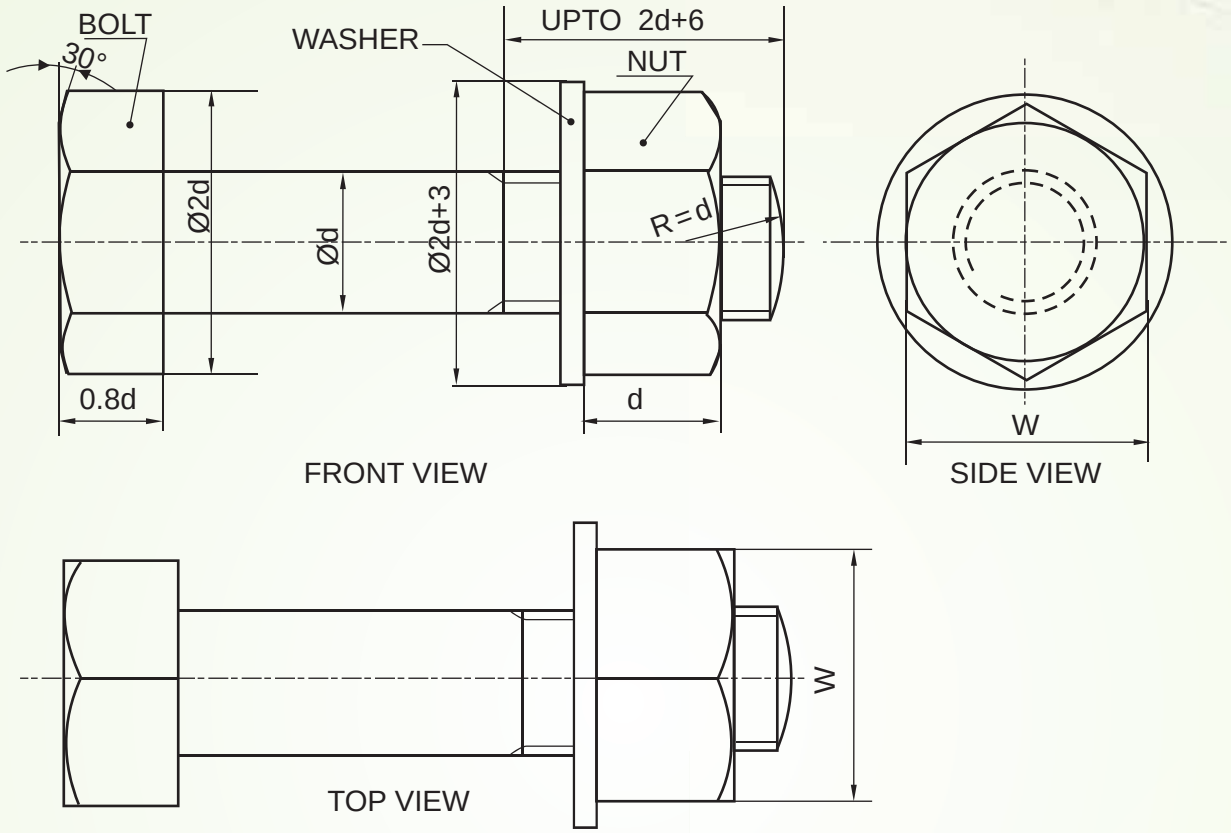

COMBINATION OF HEXAGONAL HEADED BOLT WITH HEXAGONAL NUT & WASHER

Fig 2.29

Steps Involed:

(i) Since the axis is parallel to both V.P and H.P, the side view reveals more information about the shape of the object. So start with side view, where circles are seen.

(ii) Draw two circles of diameter d = 25mm and 0.8d = 20mm, in dotted lines to indicate the invisible feature from left side.

(iii) Draw the chamfering circle of diameter, 1.5d + 3mm =40.5mm

(iv) Circumscribe hexagon around the chamfering circle, using set-square and minidrafter.

(v) Then draw a circle of diameter 2d + 3mm = 53mm for washer.

(vi) Project the side view to front view and top-view.

(vii) Both the views are completed as shown in the Fig 2.29

Example 15: Draw to scale 1:1, the Front View and Side View of an assembly of hexagonal bolt of diameter 24mm bolt length = 90mm and a hexagonal nut, keeping the axis parallel to H.P and V.P

Solution: Refer Fig 2.30

The steps involved are similar to the previous example.

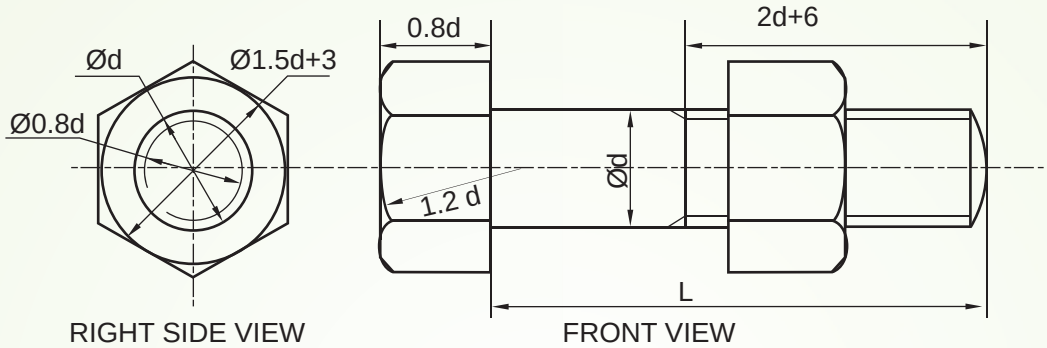

d	0.8d	1.2d	1.5d+3	2d+6	L
24	19.2	28.8	39	54	90

COMBINATION OF HEXAGONAL HEADED BOLT WITH HEXAGONAL NUT

Fig 2.30

Example 16: Draw to scale 1:1, the Front View and Side View of an assembly of a square bolt of diameter 25 mm and a square nut, keeping the axis parallel to V.P and H.P. Take length of the bolt as 100 mm.

Solution: Refer Fig 2.31

The figure is self explanatory.

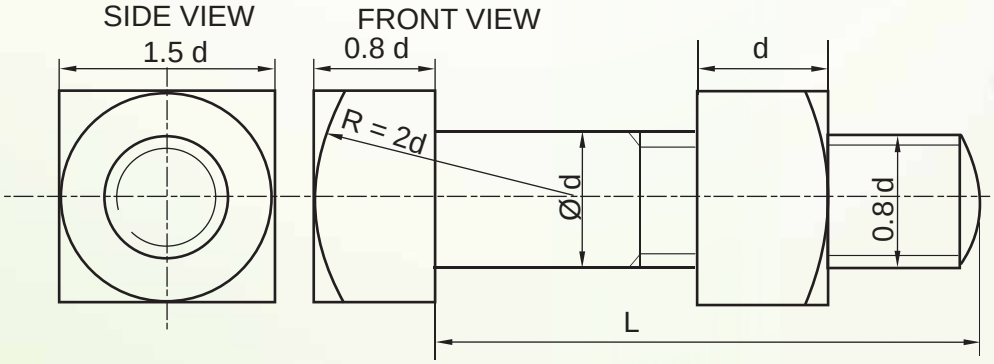

d	0.8d	1.5d	2d	2d+6	L
25	20	37.5	50	56	90

SQUARE BOLT AND SQUARE NUT IN POSITION

Fig 2.31

Exercises:

NOTE: Assume missing dimensions proportionately

1. Draw to scale 1:1, the front view, top view and side view of an assembly of hexagonal headed bolt of 30mm diameter with hexagonal nut and washer, keeping the axis parallel to V.P and H.P. Give standard dimensions.

2. Draw to scale 1:1, the front view and side view of an assembly of a hexagonal bolt of diameter 30mm and a hexagonal nut, keeping the axis parallel to V.P and H.P.

3. Draw to scale 1:1, the front view and side view of a square headed bolt of size M24, fitted with a square nut, keeping their common axis parallel to V.P and H.P.

4. Draw to scale 1:1, the front view and side view of the assembly of square headed bolt with a hexagonal nut and a washer, with the diameter of bolt as 30mm, keeping their axis parallel to V.P and H.P and two of the opposite sides of the square head of the bolt and of the hexagonal nut, parallel to V.P.

2.9 RIVETS AND RIVETED JOINTS.

We are familiar with riveted joints with our kitchen wares likes pressure cooker and frying pan. In pressure cooker, the handle is joined to the body by means of rivets. We can even notice the rivets fitted, in shoes belts etc.

Rivets are one of the permanent fasteners and is used widely in steel structures. Rivets are used in bridges, boilers and other engineering works. A rivet is a simple round rod having head at its one end (see fig 2.32)

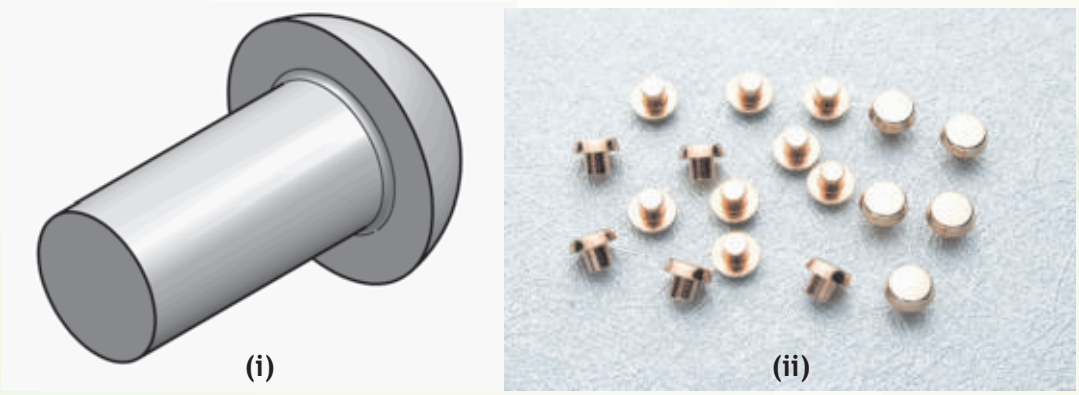

RIVETS

Fig 2.32

and the other end is made in the form of head when it is assembled to fasten the parts.

Rivet heads are of many shapes. The most common and easiest form of rivet is "snap head rivet" (see Fig 2.32 (i)). It is also known as "cup head" or "spherical-head" rivet.

Riveted joints are of two types namely

(i) Lap joint

(ii) Butt joint

Lap joints may be single, double and multiple riveted. In class XII, we are going to study the views of "single" riveted lap joint.

2.9.1 ORTHOGRAPHIC VIEWS OF SINGLE RIVETED LAP JOINT

In single riveted lap joint, the plates to be joined together overlap each other and "a single row of rivets" passes through both the plates.

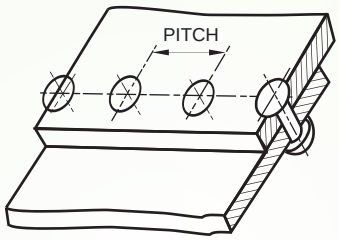

SINGLE RIVETED LAP JOINT.
Fig, 2.33

Let us now learn how to draw the views of single riveted lap joint.

Example 17: Draw to scale 1:1, the top view and sectional front view of single riveted lap joint, when the thickness of the plates to be joined = 16mm.

Solution: Refer Fig. 2.34

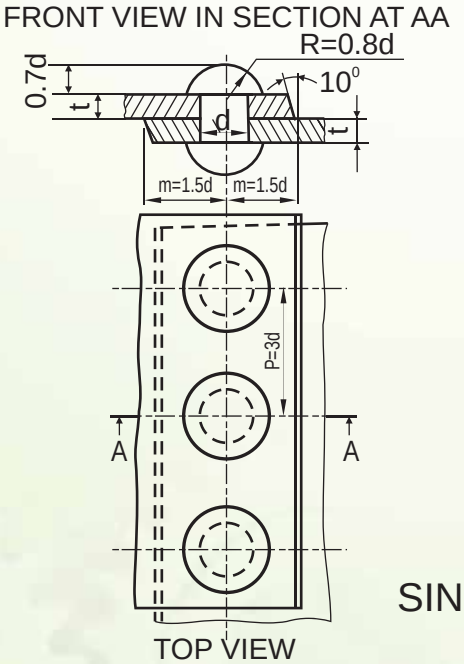

t	25
$d=6\sqrt{t}$	24
m=1.5d	36
P=3d	72

SINGLE RIVETED LAP JOINT
Fig, 2.34

Steps Involved:

Before starting the view, the standard dimensions are to be calculated as follows.

Let't' be the thickness of the plates to be be joined. Here t =16mm

The empirical formula for calculating the diameter'd' of the rivet to be used is given as $d = 6\sqrt{t}$ mm

So, $d = \sqrt{16}$

$= 6x4$ mm

d = 24 mm is the diameter of the rivet to be used in this case.

The margin 'm' is "the distance from the centre of the rivet to the nearest edge of the plate", and is taken as $m = 1.5d$

$= 1.5x24$

$= 36$ mm

The pitch 'p' is the distance between the centres of the adjacent rivets, and is taken as

$P = 3d$

$= 3x24$

$= 72$mm

The angle 10 degree is made by the fullering tool (a special punch or chisel) to make the joint leak proof. (The process of fullering is beyond the scope of this book.)

Then the top view and the sectional front view are to be done as shown clearly in fig 2.34.

The edges of the plates in the top view are shown in wavy lines to represent that "a part of plates" are shown.

Exercises

NOTE: Assume the missing dimensions proportionately

1. Draw to scale full size, the full sectional front view of a single riveted lap joint, taking thickness of the plates as 09mm. Give standard dimensions.
2. Draw to scale 1:1, the front view in section and plan of a single riveted lap joint, taking the thickness of the plates as 25mm. Give standard dimensions.

2.10 INTRODUCTION

FREE HAND SKETCHES OF MACHINE PARTS

In freehand sketches of machine parts, the students must do the drawing without the use of scale, instrument etc., Appropriate measurement is taken and correspondingly a table for each figure must be made showing calculated values. The figure must show the dimensions in terms of diameter 'd'.

2.11 CONVENTIONAL REPRESENTATION OF THREADS

In actual projection, the edges of threads would be represented by helical curves. It takes a lot of time to draw helical curves. So, for convenience sake threads are generally shown by conventional methods recommended by B.I.S

2.11.1 CONVENTIONAL REPRESENTATION OF EXTERNAL V-THREADS

The Bureau of Indian standards has recommended a very simple method of representing V-threads. Fig 2.35 shows the simplified representation of external V-threads. According to this convention, two continuous thick lines and two continuous thin lines are drawn to represent crest and roots of the thread respectively. The limit of useful length of the thread is indicated by a thick line perpendicular to the axis.

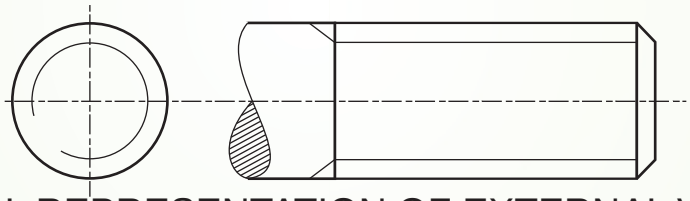

CONVENTIONAL REPRESENTATION OF EXTERNAL V-THREADS

Fig 2.35

The other way of representing external V-thread is as follows.

(i) Draw a rectangle (see fig 2.36) representing a cylinder with diameter equal to the nominal diameter of the bolt.

(ii) Draw a line AB perpendicular to the bolt.

(iii) Make a point B' such that BB' = 0.5xpitch. BB is called as slope = 0.5P for a single start thread. B' is located on the lower line for a right hand thread (RH thread)

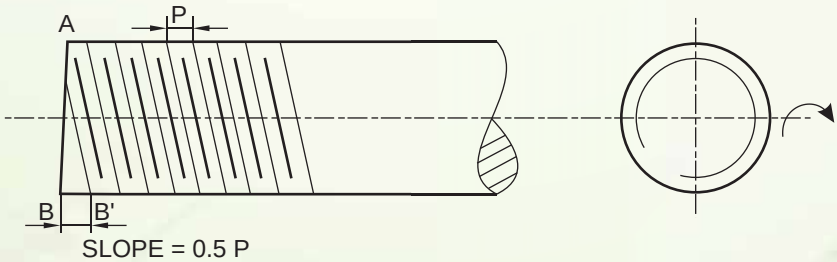

RIGHT HAND V-THREAD

Fig 2.36

(iv) Fig 2.36 is the representation of RH thread. In the case of RH thread, for a clockwise rotation, the thread is screwed on.

(v) Draw two thin lines parallel to the axis representing the roots of the thread.

(vi) On the thick line, mark the divisions equal to pitch. On the thin line, mark the divisions = (p/2) such that they form the shape of 'V'

(vii) Join root to root points with thick lines and crest to crest points with thin lines

(viii) The side view has two circles representing the crest and root of the thread. Crest circle is thick and continuous, whereas root circle is drawn thin and incomplete to represent the external thread.

Similarly the LH-external V-thread can be represented as follows. Note that the slope point is located on the top line and inclination of the line is opposite of RH thread. see fig 2.37

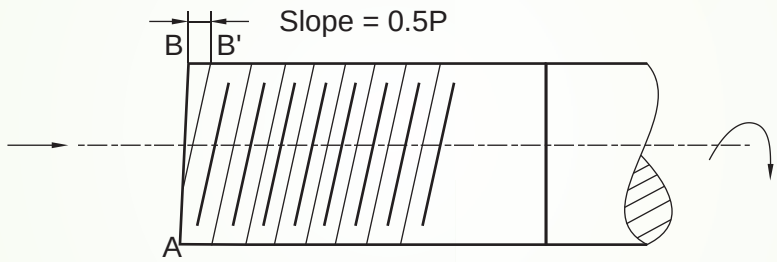

LEFT HAND V-THREAD

Fig 2.37

2.11.2 CONVENTIONAL REPRESETATION OF INTERNAL V-THREADS

Fig 2.38 shows the representation of internal V-threads. It shows the sectional view of a threaded hole in the front view. Thick line indicates the crest and thin line indicates the root. Section (hatching) lines are extended up to thick lines. The side view shows a thick circle representing the crest and roots by thin incomplete circle

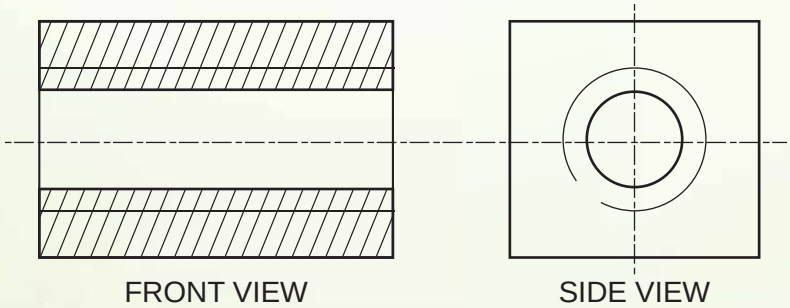

CONVENTIONAL REPRESENTATION OF INTERNAL V-THREADS

Fig 2.38

2.11.3 CONVENTIONAL REPRESENTATION OF EXTERNAL SQUARE THREADS

Fig 2.39(i) shows the conventional representation of external RH square threads. The figure is self explanatory. Fig 2.39(ii) shows the LH square threads.

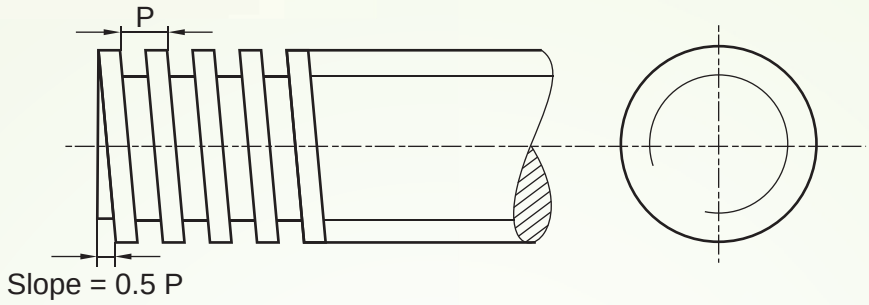

RIGHT HAND SQUARE THREAD

Fig 2.39(i)

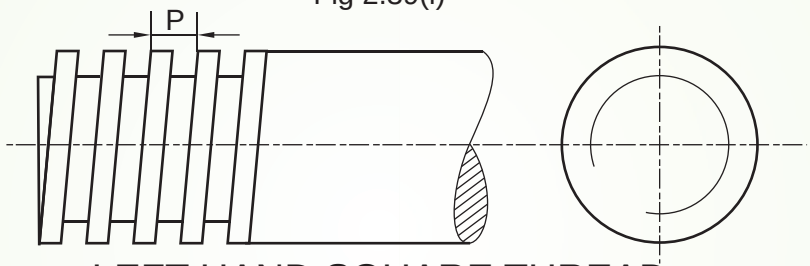

LEFT HAND SQUARE THREAD

Fig 2.39(ii)

2.11.4 CONVENTIONAL REPRESENTATION OF INTERNAL SQUARE THREADS

Fig 2.40(i) shows the representation of RH internal square threads and fig 2.40(ii) shown LH internal square thread.

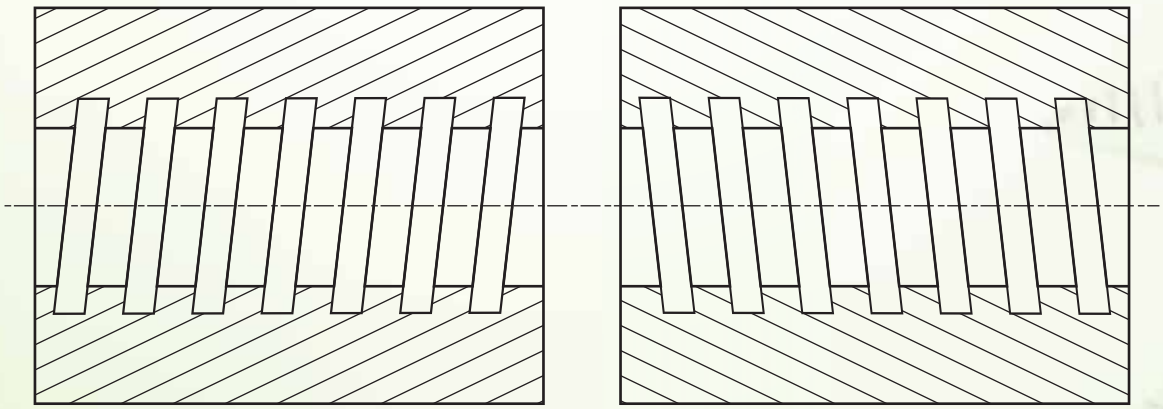

RIGHT HAND THREAD (INTERNAL)

Fig 2.40 (i)

LEFT HAND THREAD (INTERNAL)

Fig 2.40 (ii)

Exercises

Note: Take p = 5mm and other dimensions suitably

1. Sketch freehand the conventional representation of internal and external 'V' threads.
2. Sketch freehand the single start conventional LH external square threads.
3. Sketch freehand the single start conventional RH external square threads.
4. Sketch freehand the conventional representation of internal and external square threads.

2.12 STUDS

A stud is a cylindrical piece of metal having threads at both ends and is plain cylinder or square cross section/ square neck or plain cylinder or with collar in the central portion.

STUD
Fig 2.41

For connecting two parts, one end (metal end) of the stud is screwed into a threaded hole in one part and the other end (nut end) is passed through a clearance hole in the other part, so that the plain portion of the stud remains within this hole. A nut is screwed on the open end of the stud. The portion of the stud where nut is screwed on is called nut end and the other end of the stud is called metal end or stud end.

Stud is a headless bolt and is used where sufficient space for bolt head is not available. The following fig 2.42 shows the view of a plain stud, stud with square neck and stud with collar.

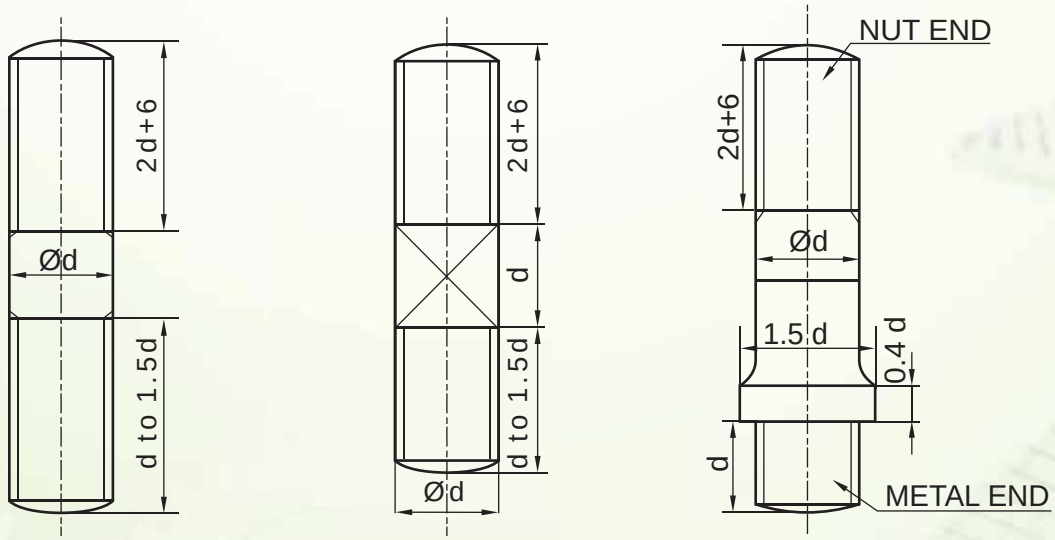

(i) PLAIN STUD (ii) STUD WITH SQUARE NECK (iii) STUD WITH COLLAR

Fig 2.42

Example 18: Sketch freehand the Front view and Top view of a Plain stud of diameter = 20mm, keeping its axis vertical.

Solution: Fefer Fig 2.43

Steps Involved:

(i) Calculate the values of standard dimensions.

(ii) Draw free hand two circles of diameters d =20mm and 0.85d = 17 mm as top view.

(iii) Draw a rectangle for the front view with approximate measurements.

(iv) The metal end is chamfered and the nut end is either chamfered or rounded.

(v) Dimension the views in term of 'd'.

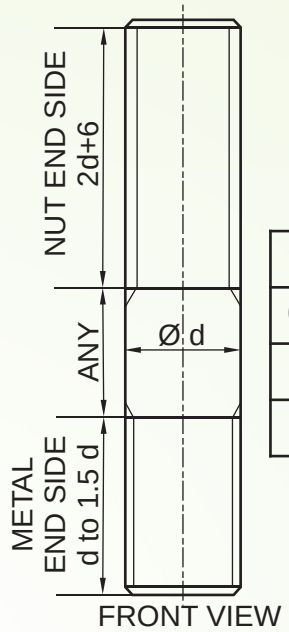

d	20
0.85d	17
1.5d	30
2d+6	46

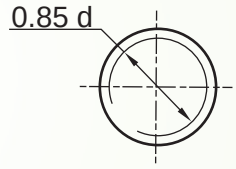

TOP VIEW

PLAIN STUD

Fig 2.43

Example 19: Sketch free hand the Front view and Side view of a collar stud with diameter 20 mm, when its axis is parallel to V.P and H.P. Give standard dimensions.

Solution

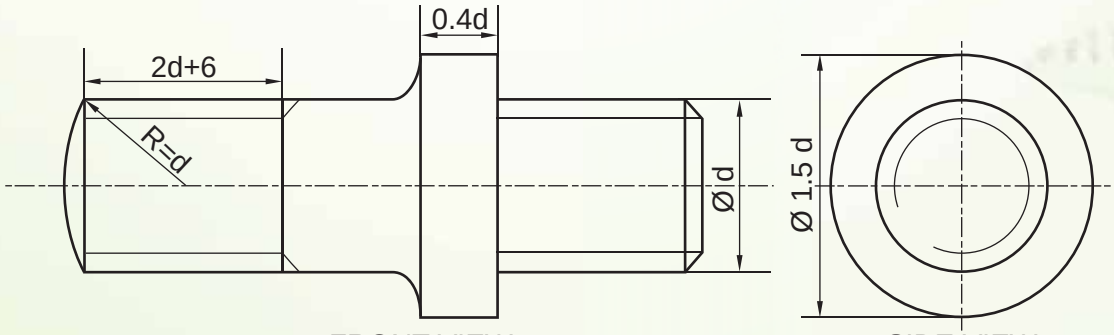

FRONT VIEW SIDE VIEW

d	1.5d	2d+6	0.4d
20	30	46	08

COLLAR STUD

Fig 2.44

Exercises:

NOTE: Assume missing dimensions proportionately

1. Sketch freehand the Front view and Top view of a Plain stud of diameter = 25mm, keeping its axis perpendicular to H.P. Give standard dimensions.
2. Sketch freehand the Front elevation and Side view of a Plain stud of diameter d = 25mm, with its axis parallel to V.P and H.P.Give standard dimensions.
3. Sketch freehand the Front view and Top view of a stud with a square neck, keeping the axis perpendicular to H.P. Give standard dimensions.
4. Sketch freehand the Front elevation and Side view of a stud with a square neck, keeping the axis parallel to V.P.Give standard dimensions.
5. Sketch freehand, the Front view and Plan of a stud with collar, keeping the axis vertical. Give standard dimensions.

2.13 MACHINE SCREWS

A screw is a bolt which is threaded throughout its length. Generally it is screwed into a threaded hole/tapped hole. Screws or machine screws are available with different shapes of heads. The commonly used types of machine screws are shown in fig 2.46

SCREW
Fig 2.45

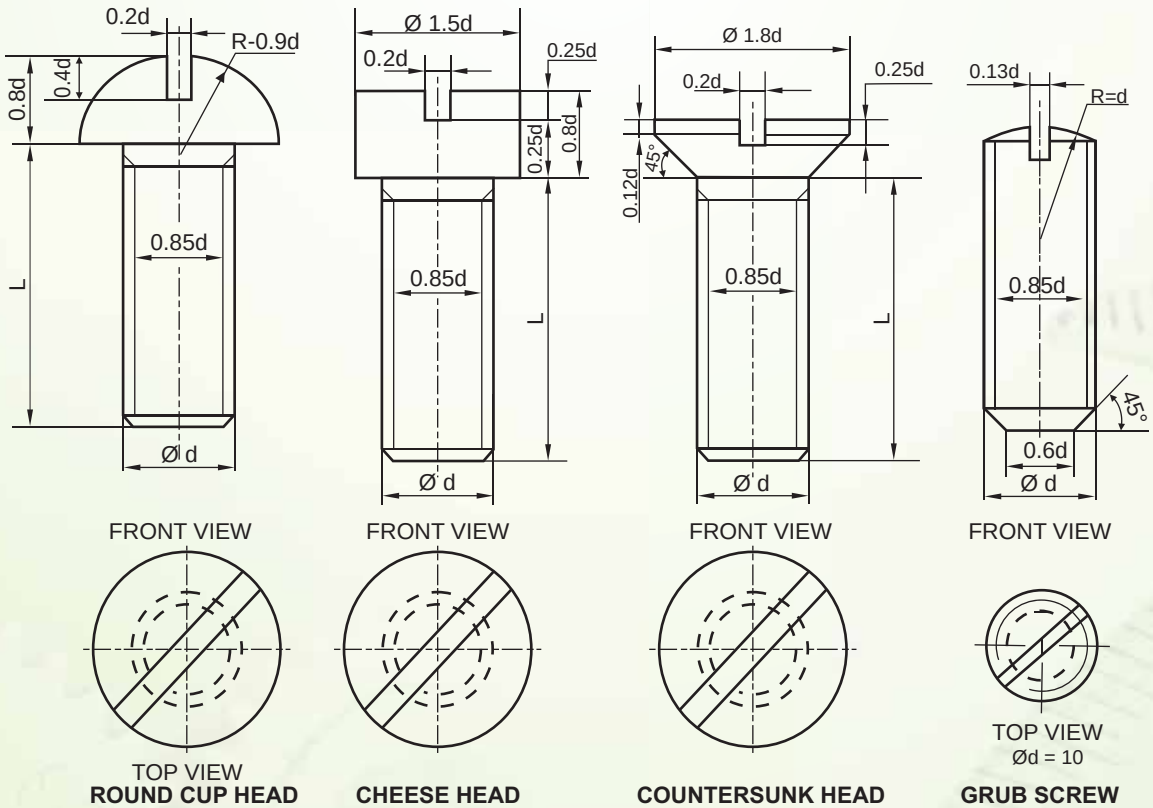

MACHINE SCREWS Fig 2.46

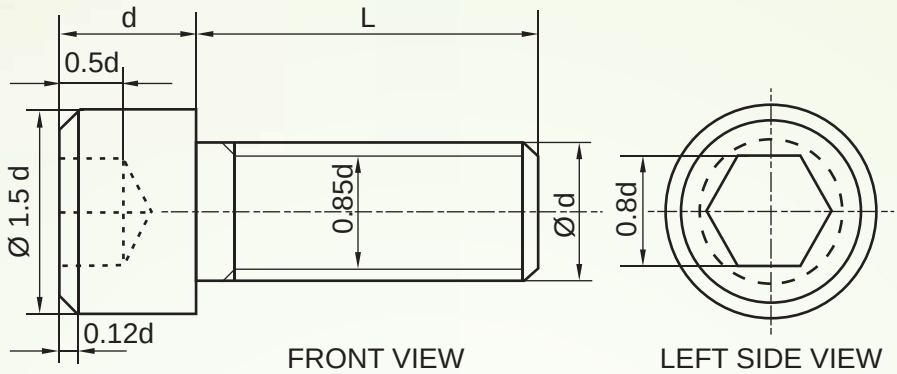

SOCKET HEAD SCREW

Fig 2.46

Example 20: Sketch freehand the front view and top view of a cheese head screw of size M2O, keeping its axis vertical. Give standard dimensions.

Solution: Refer Fig 2.47

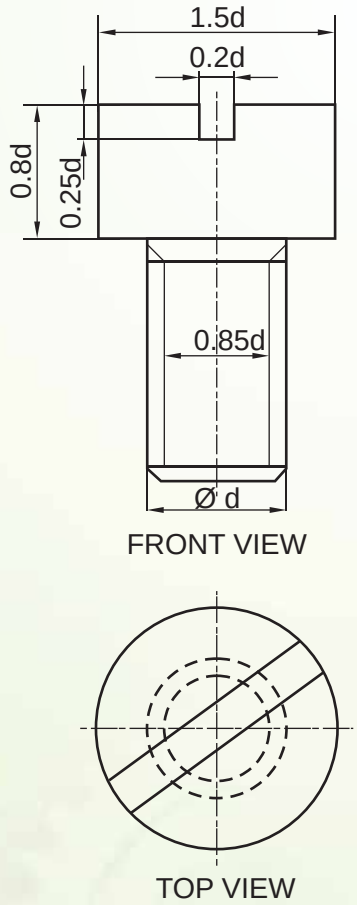

d	20
0.85d	17
0.2d	04
0.25d	05
0.8d	16
1.5d	30

Fig 2.47

Example 21: Sketch freehand the front view and top view of a 90° flat counter sunk machine screw of size M2O, keeping its axis vertical. Give standard dimensions.

Solution: Refer Fig 2.48

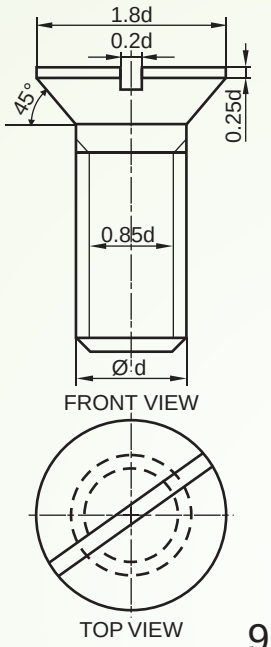

d	20
0.2d	4
0.25d	5
d/8	2.5
0.85d	17
1.8d	36

90° FLAT CSK SCREW

Fig 2.48

Example 22: Sketch freehand the front view and top view of a socket head machine screw of size M10, keeping its axis perpendicular to H.P. Give standard dimensions.

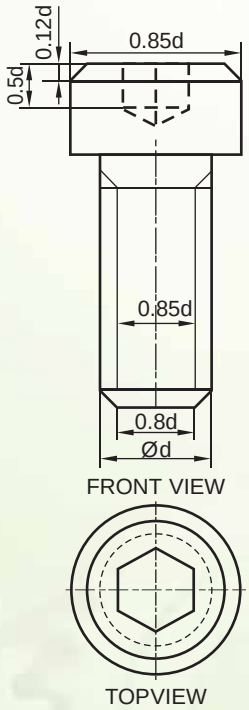

d	10
0.8d	8
0.85d	8.5
1.5d	15
0.12d	1.2
0.5d	5

SOCKET HEAD MACHINE SCREW

Fig 2.49

Exercises

NOTE: Assume missing dimensions proportionately

1. Sketch freehand the Front view and Side view of a round head screw of size M10, keeping its axis horizontal. Give standard dimensions.
2. Sketch freehand the Front view and Top view of cheese head machine screw of size M10, keeping its axis vertical. Give standard dimensions.
3. Sketch freehand the Front view and Top view of a 90 degree flat counter sunk machine screw of size M10, keeping its axis vertical. Give standard dimensions.
4. Sketch freehand the Front view and Side view of a hexagonal socket head machine screw of size M2O, keeping its axis parallel to V.P and H.P. Give standard dimensions.
5. Sketch freehand the Front view and Top view of a grub screw of size M10, keeping its axis vertical. Give standard dimensions.
6. Sketch freehand the Front view and Top view of a grub screw of size M2O, keeping its axis vertical. Give standard dimensions.

2.14 RIVET HEADS

We already know that, a rivet is a small cylindrical piece of metal having a head, body and a tail. While adjoining two parts, the tail is made into the form of head. The commonly used types of rivet heads are shown in fig 2.50

TYPES OF RIVETS

Fig 2.50

Fig 2.51 shows views of some of the types of rivets given in our syllabus.

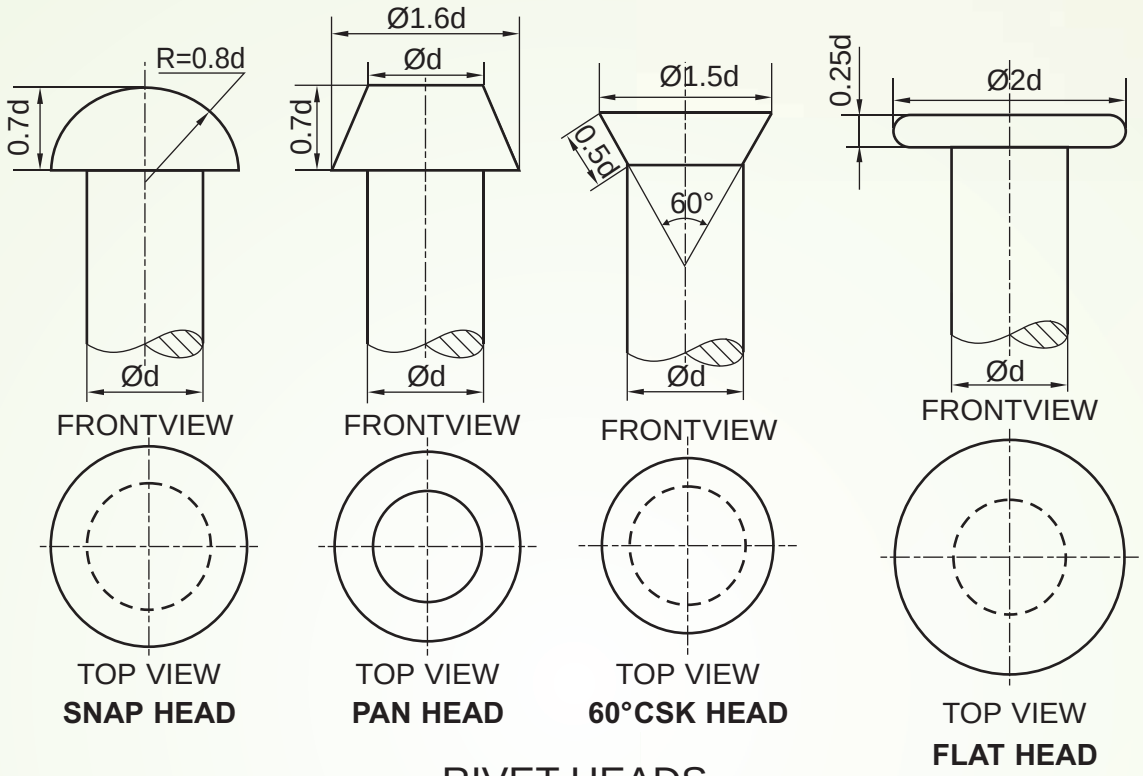

RIVET HEADS
Fig 2.51

Example 23: Sketch freehand the Front view and Top view of a snap head rivet of diameter 20mm, keeping its axis vertical. Give standard dimensions.

Solution: Refer Fig 2.52

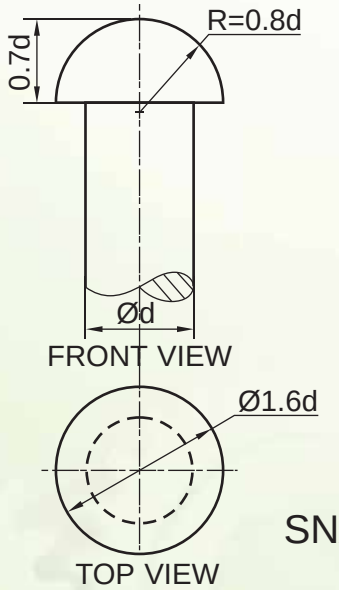

d	20
0.7d	14
0.8d	16
1.6d	32

SNAP HEAD RIVET
Fig 2.52

Example 24: Sketch freehand the front view and top view of a pan head rivet of diameter 20mm, keeping its axis vertical. Give standard dimensions.

Solution: Refer Fig 2.53

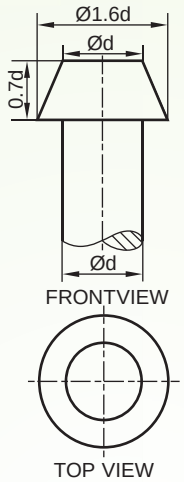

d	20
0.7d	14
1.6d	32

PAN HEAD RIVET

Fig 2.53

EXERCISES

Note: Assume missing dimensions proportionately

1. Sketch freehand the Front view and Top view of a snap head rivet of diameter 25mm, keeping its axis vertical. Give standard dimensions.
2. Sketch freehand the Front elevation and Plan of a pan head rivet of diameter 25mm, keeping its axis vertical. Give standard dimensions.
3. Sketch freehand the Front view and Top view of a 60° counter sunk flat head rivet of diameter 20mm, keeping its axis vertical. Give standard dimensions.
4. Sketch freehand the Front view and Top view of a flat head rivet of diameter 20mm, keeping its axis vertical. Give standard dimensions.

2.15 KEYS

Key is piece of metal which is used to fasten two parts together, specially to join two circular parts together. For example, pulleys, flywheels etc. are joined to the shaft by means of a key. See fig 2.54. Key is also used to prevent the relative movement between the shaft and the parts mounted on it. Whenever required, it can be removed easily. So key is one of the temporary fasteners. The groove cut on the shaft to accommodate a key is called key seat and the corresponding groove in the matting piece is called key way.

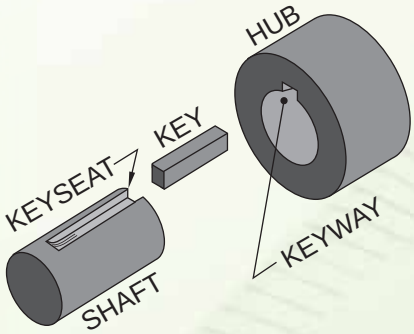

KEY IN POSITION

Fig 2.54

2.15.1 TYPES OF SUNK KEYS

A sunk key is designated by its width x thickness x length. (w x T x L) see fig 2.55

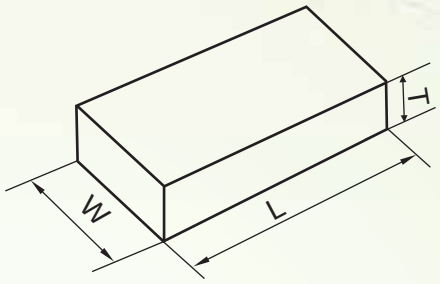

RECTANGULAR SUNK KEY
Fig 2.55

Sunk keys means, half of the thickness (0.5T) (measured at the side not on centre line) k within the key seat and the other half thickness (0.5T) is within the keyway (see fig 2.57). There are different types of sunk keys viz.

(i) rectangular taper key

(ii) woodruff key

(iii) double head feather key

Let us now learn how to draw the views of these sunk keys.

2.15.1.1 RECTANGULAR TAPER KEY

Rectangular sunk taper key is of rectangular cross section, with the thickness not uniform throughout the length of the key. See fig 2.56

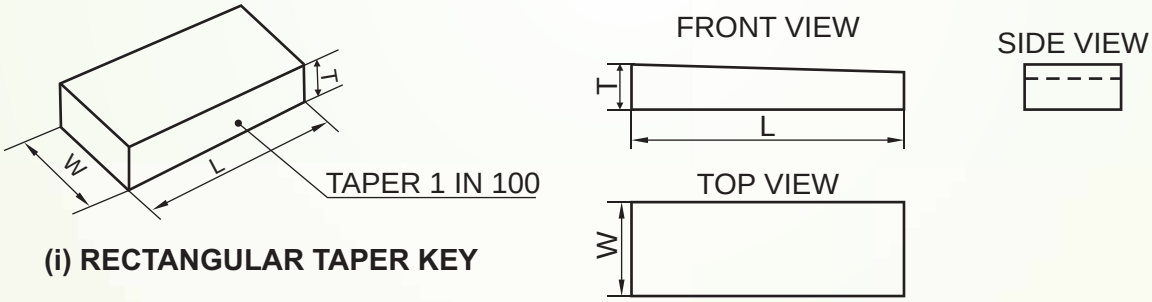

(i) RECTANGULAR TAPER KEY

VIEWS OF A RECTANGULAR TAPER KEY
Fig 2.56

Drawing proportions for a rectangular taper key are as follows.

Let 'D' be the diameter of the shaft, then width of the key, W=D/4

Thickness of the key, T=D/6

Length=1.5D to 2D, Taper = 1 in 100

The taper key prevent relative rotational as well as axial movement between the two mating piece. Generally, the upper surface of the key is tapered and hence the keyway is also correspondingly tapered. The tapered end is hammered to remove the key from the joint.

Example 24: Sketch free hand a rectangular taper key, in position, on a shaft of diameter 40mm, keeping the axis of the shaft parallel to V.P and H.P, showing upper half sectional front elevation. Give standard dimensions.

Solution Refer Fig 2.57

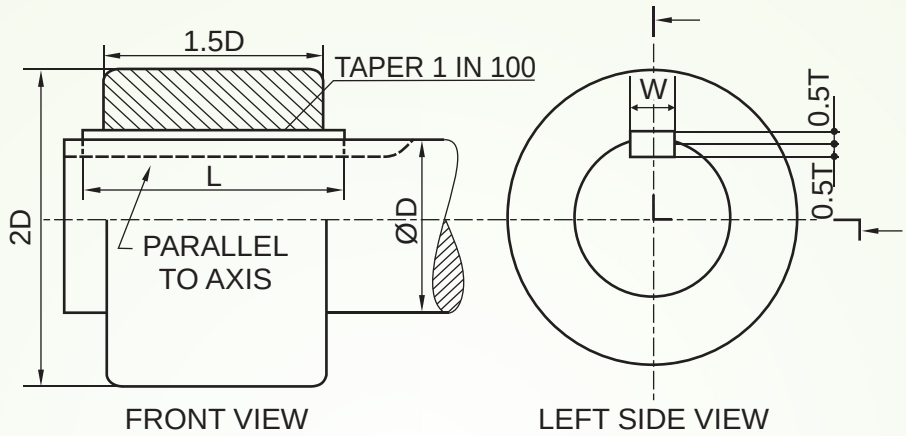

D	$W=\frac{D}{4}$	$T=\frac{D}{6}$	1.5D	2D
40	10	6.7	60	80

RECTANGULAR TAPER KEY IN POSITION

Fig 2.57

2.15.1.2 WOODRUFF KEY

Woodruff key is a special sunk key. It looks like a segment of a circular disc. The key seat is semi circular in shape but the keyway is rectangular. The keyway is smaller in size than the key seat. The advantage of woodruff key is that it can be easily adjusted in the recess. It is largely used in machine tools and automobile work.

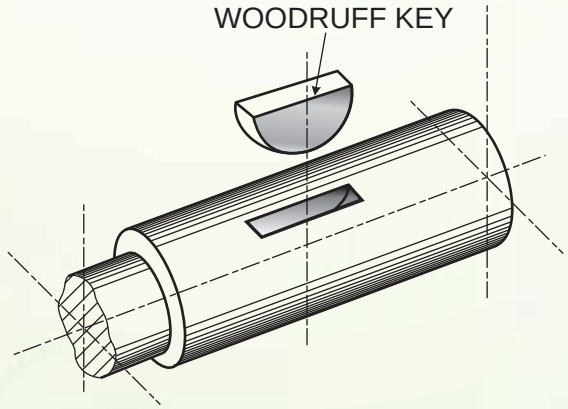

WOODRUFF KEY WITH KEY SLOT IN SHAFT

Fig 2.58

Example 26: Sketch freehand the Front view, Top view and Side view of a woodruff key, suitable for a shaft of diameter 40mm. Give standard dimensions.

Solution: Refer Fig 2.59

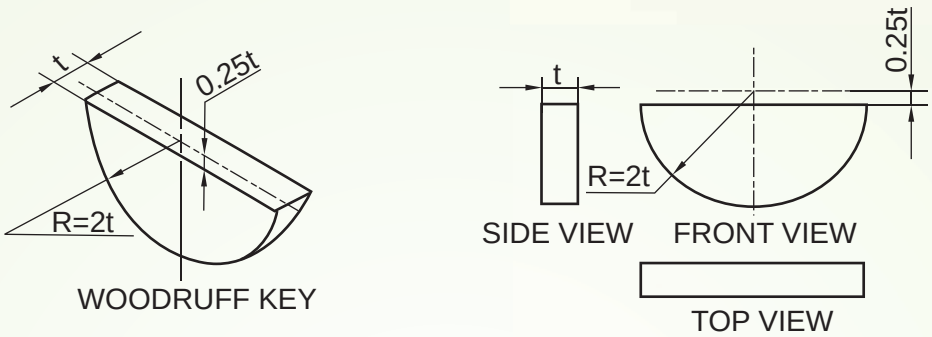

D	$t = \frac{D}{6}$	R = 2t	0.25t
40	6.7	13.4	10

WOODRUFF KEY

Fig 2.59

Example 27: Sketch freehand a woodruff-key in position, on a shaft of diameter 60mm, keeping the axis of the shaft parallel to V.P and H.P. Give standard dimensions.

Solution: Refer Fig 2.60

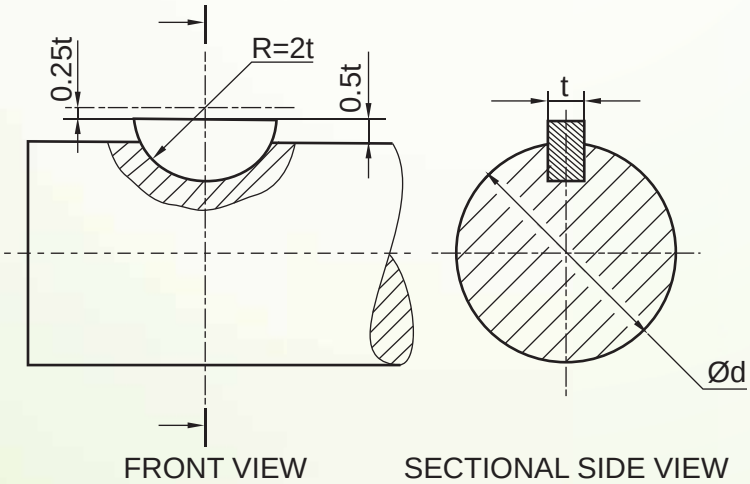

d	60
t	10
0.25t	2.5
0.5t	5
2t	20

WOODRUFF KEY WITH SHAFT

Fig 2.60

2.15.1.3 DOUBLE HEADED FEATHER KEY WITH GIB HEAD

Feather key is a kind of sunk parallel key. In parallel key, the thickness remains same throughout the length of the key. Fig 2.61 shows a feather key with gib head. A double head feather key with gib head on both ends grips the hub between its heads.

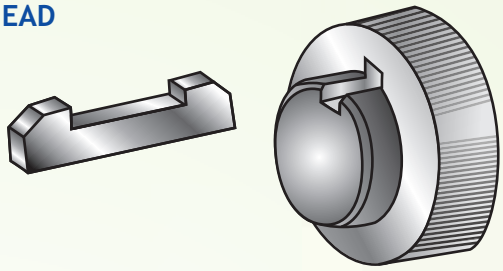

DOUBLE HEADED
GIB HEADED FEATHER KEY
Fig 2.61

Example 28: Sketch freehand the front view, side view and plan of a double-head gib key for a shaft of diameter 60mm. Give standard dimensions.

Solution: Refer Fig 2.62

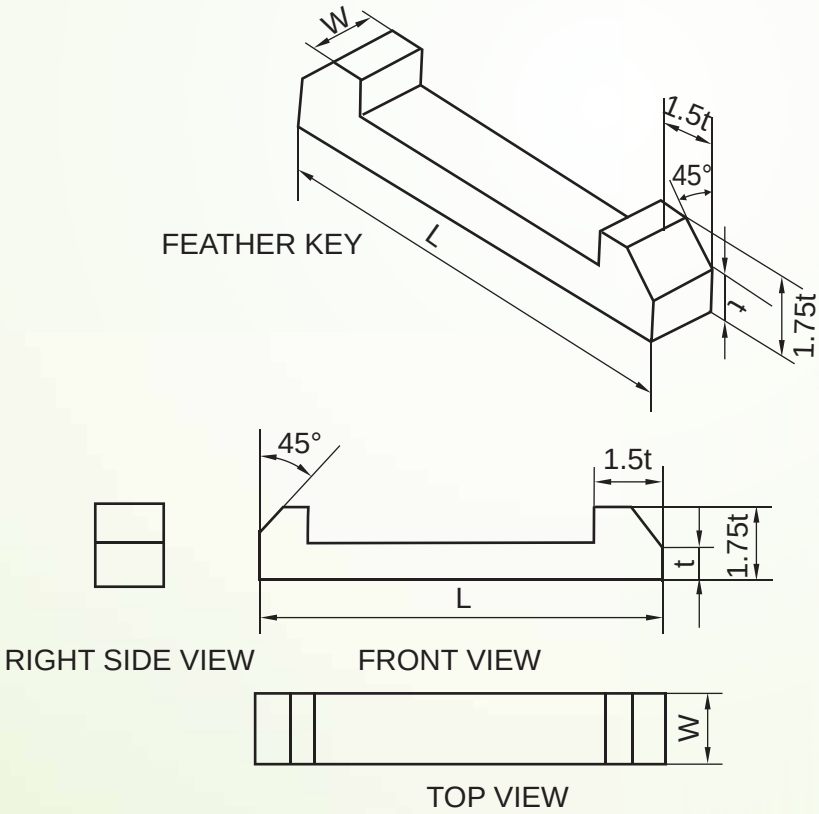

d	60
W	15
t	10
1.5t	15
1.75t	17.5

DOUBLE HEADED GIB HEADED FEATHER KEY
Fig 2.62

Example 29: Sketch freehand a double head gib key, in position on a shaft of diameter 60mm, keeping the axis of the shaft parallel to V.P and H.P. Give standard dimensions.

Solution: Refer Fig 2.63

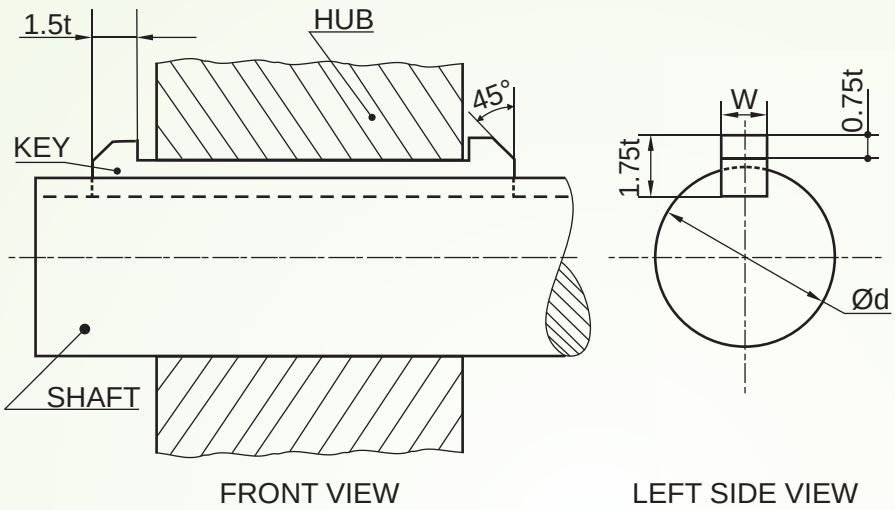

d	60
w	15
t	10
0.5t	05
1.5t	15
1.75t	17.5

DOUBLE HEADED GIB HEADED FEATHER KEY IN POSITION

Fig 2.63

Exercises:

Note: Assume missing dimensions proportionately

1. Sketch freehand the Front view, Side view and Plan of a rectangular taper key for a shaft of diameter 40mm. Give standard dimensions.
2. Sketch freehand the Front view, Side view and Plan of a woodruff key for a shaft of 60mm. diameter. Give standard dimensions.
3. Sketch freehand the Front view, Top view and Side view of a double head gib key for a shaft of 40 mm. diameter. Give standard dimensions.
4. Sketch freehand a rectangular taper key in position, on a shaft of 60 mm diameter, keeping the axis of the shaft parallel to V.P and H.P. Give standard dimensions.
5. Sketch freehand a woodruff key in position, on a shaft of diameter, 48 mm, keeping the axis of the shaft parallel to V.P and H.P. Give standard dimensions.
6. Sketch freehand a double head gib key in position, for a shaft of 40 mm diameter, keeping the axis of the shaft parallel to V.P and H.P. Give standard dimensions.

CHAPTER 3

BEARINGS

All of you have seen a bicycle and most of you may know how to ride it. With the help of paddles you may have driven it. It needs very little effort to run a bicycle. Do you know why a bicycle runs so smoothly and easily? The reason is that friction is greatly reduced by using bearings in the moving parts and you must have oiled/ greased these bearings from time to time.

In the industry also the bearings are used to help in smooth running of the shafts. As we all know that the friction is a necessary evil. The friction generates heat and opposes the free movement of the moving parts. We can not eliminate the friction together but we can reduce it to a large extent by using some suitable lubricant.

The meaning of bearing as given in the Dictionary is a part of a machine which support another part that turns round a wheel' or it can be defined as the support and guide for a rotating ,oscillating or sliding shaft, pivot or wheel' .

Bearings are used as a mechanical component to a certain part and this is done by utilizing the small frictional force of the bearings, which makes them rotate easily, all the while with the force and load acting against them.

CLASSIFICATION OF BEARINGS

There are two types of bearings according to the type of motion:

1. Plain bearings and
2. Anti-Friction bearings or Rolling Bearings

We will learn that plain bearings are such that they primarily support sliding, radial and thrust loads and linear motions also.

Plain bearings may further be classified as:

1. **Plain Journal Bearings:** These support radial loads at right angles to the shaft axis.
2. **Spherical Bearings:** These are used where the loads are not aligned and are radial.
3. **Thrust Bearings:** These bearings support axial and radial loads.
4. **Linear Bearings:** These bearings only help in linear motion.
5. **Pivot Bearings or Foot Step Bearings:** These bearings are used where the thrust is only axial.

ANTI-FRICTION OR ROLLER BEARINGS

These bearings can be:

1. Needle Bearings.
2. Ball Bearings and
3. Roller Bearings.

The bearings mentioned above can be rearranged according to the loading conditions as:

1. **Journal Bearings:** In this bearing the bearing pressure is perpendicular to the axis of the shaft.
2. **Thrust Bearing or Collar Bearing:** In this bearing the pressure is parallel to the axis of the shaft.
3. **Pivot Bearing:** In this bearing the bearing pressure is parallel to the axis of the shaft and the end of the shaft, rests on the bearing surface.
4. **Linear Bearings**
5. **Spherical Bearings.**

In this chapter, we shall learn more about the Journal Bearings, which forms the sleeve around the shaft and supports a bearing at right angles to the axis of the bearing. The portion of the shaft in the sleeve is called the journal. The journal bearings are used to support only the perpendicular or radial load. i.e., the load acting perpendicular to the shaft axis.

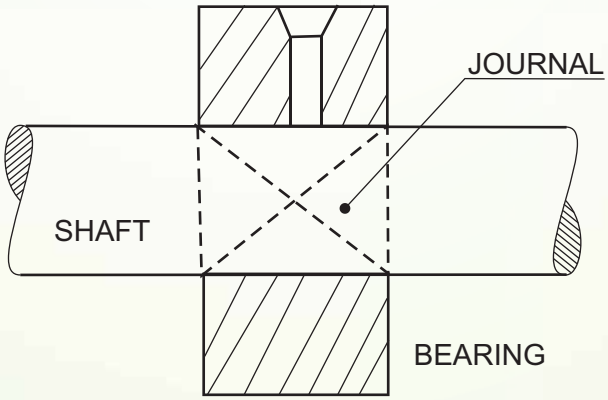

JOURNAL BEARING
Fig: 3.1

The examples of Journal Bearings are:

1. Open Bearing.
2. Bushed Bearing.

3. Plummer Block or Pedestal Bearing.

4. Pivot Bearing or Foot Step Bearing.

In our syllabus the Assembly and Dis-assembly of the following Bearings are prescribed, so let us learn more about these in detail:

BUSHED BEARING

It is a journal bearing in which a bush made of some soft material such as: brass, bronze or gun metal is used. This bearing is useful for higher loads at medium speed. These brasses can be changed with the new brasses when worn out. These brasses (bushes) are tightly fitted into a bored hole in the body of the bearing. The inside of the bush is bored as a fit for the shaft. These brasses (bushes) are prevented from rotating or sliding by the use of a grub-screw or a dowel-pin inserted half inside the bush and half in the body of the bearing. The other method is the use of a snug. In this bearing the base plate or sole is recessed up to 3 mm leaving a standing material all around, known as padding which helps in the stability of the sole on the resting surface and also reduces the machining area. A counter bore sunk hole is drilled at the top of the body to hold the lubricant which facilitates to reduce the friction between the shaft and bush. Oval drilled holes are provided in the sole plate to facilitate any misalignment or lateral adjustments of bolts while fitting the bearing in position on base / floor. This bearing is generally placed only at or near the ends of the shaft, because in this the shaft can be inserted end wise only. (See fig: 3.2)

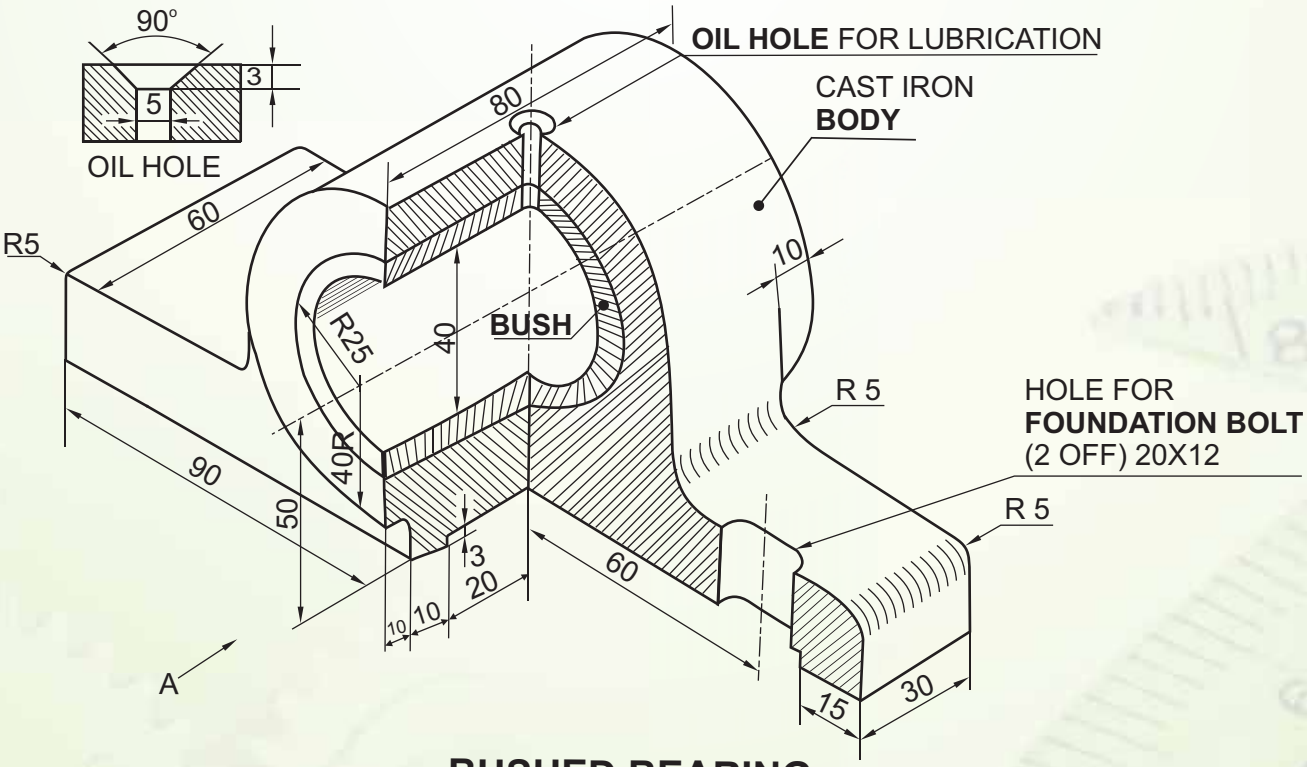

BUSHED BEARING

Fig: 3.2

Now let us solve some questions:

Question: The isometric view of a Bushed Bearing is shown below (fig: 3.3) Draw the following views to scale 1:1:-

a. Sectional front view, showing right half in section.

b. Side view as viewed from left.

c. Top view.

Print title and scale used. Give 8 important dimensions.

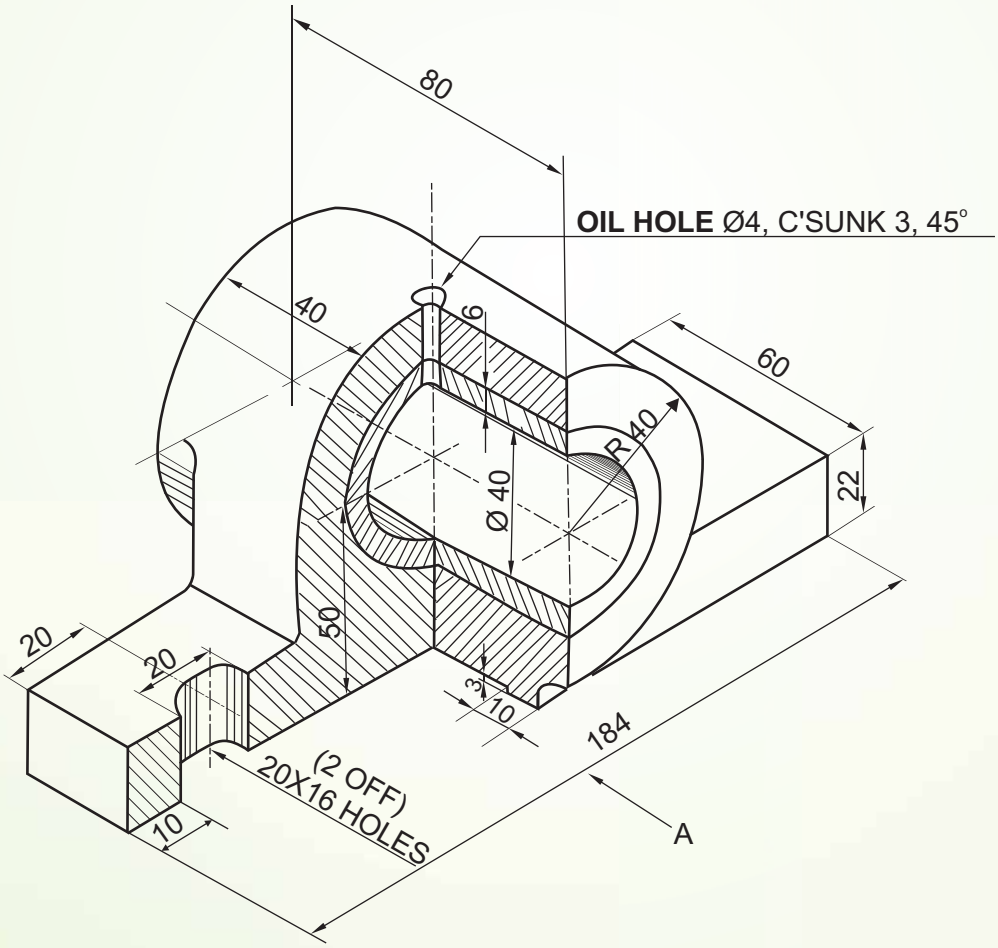

BUSHED BEARING

Fig: 3.3

Answer of Fig. 3.3

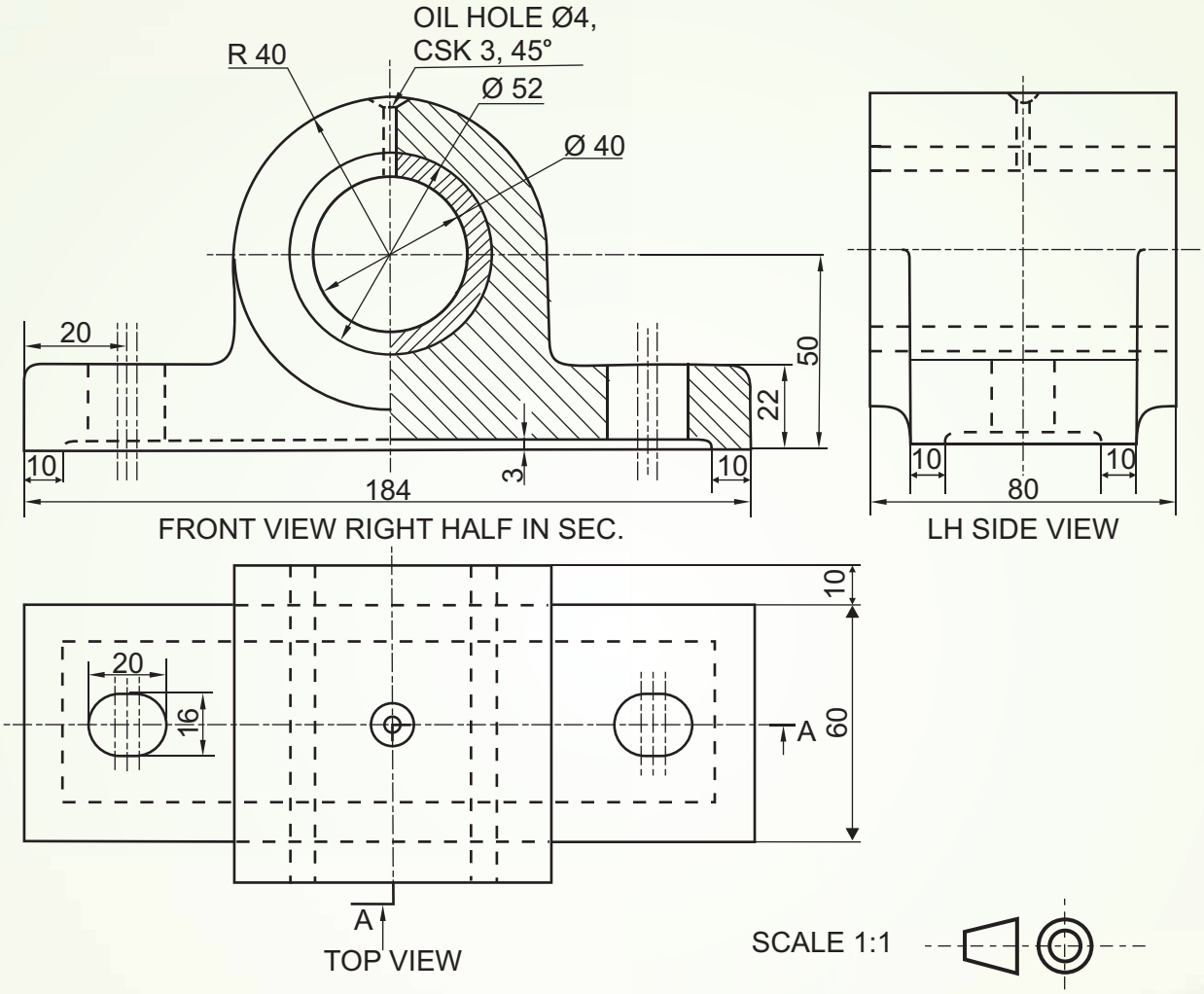

BUSHED BEARING

Fig: 3.4

Question: The isometric view of a Bushed Bearing is shown below (Fig. 3.5). Draw the following views to scale 1:1:-

a. Sectional front view, showing right half in section.

b. Top view,

Print title and scale used. Give 8 important dimensions.

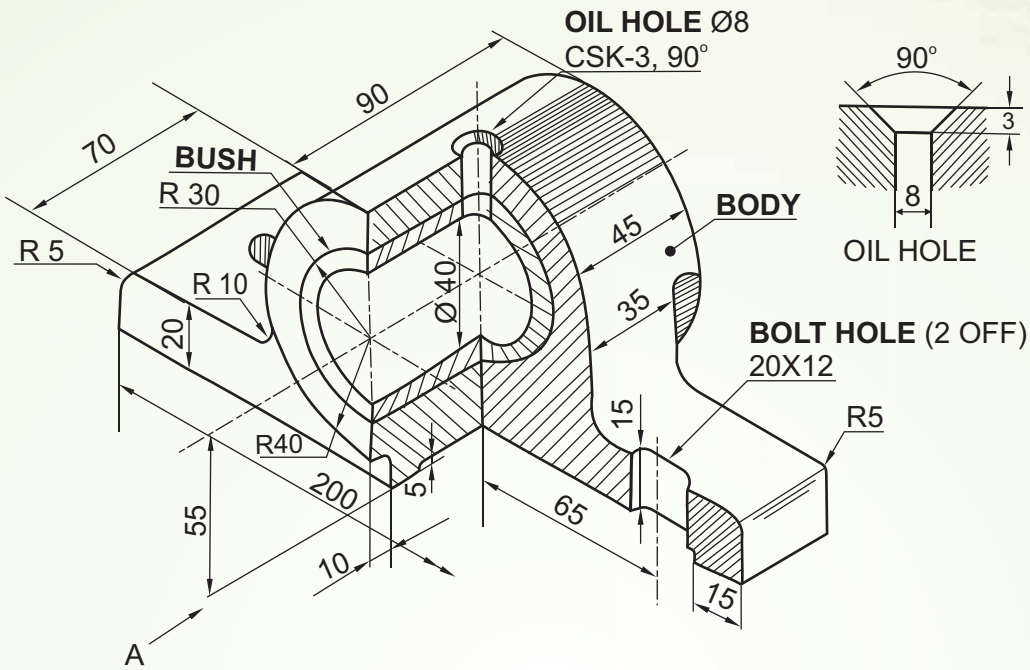

PICTORIAL VIEW OF A BUSH BEARING
(RIGHT HALF IN SECTION)

Fig: 3.5

Answer of fig. 3.5

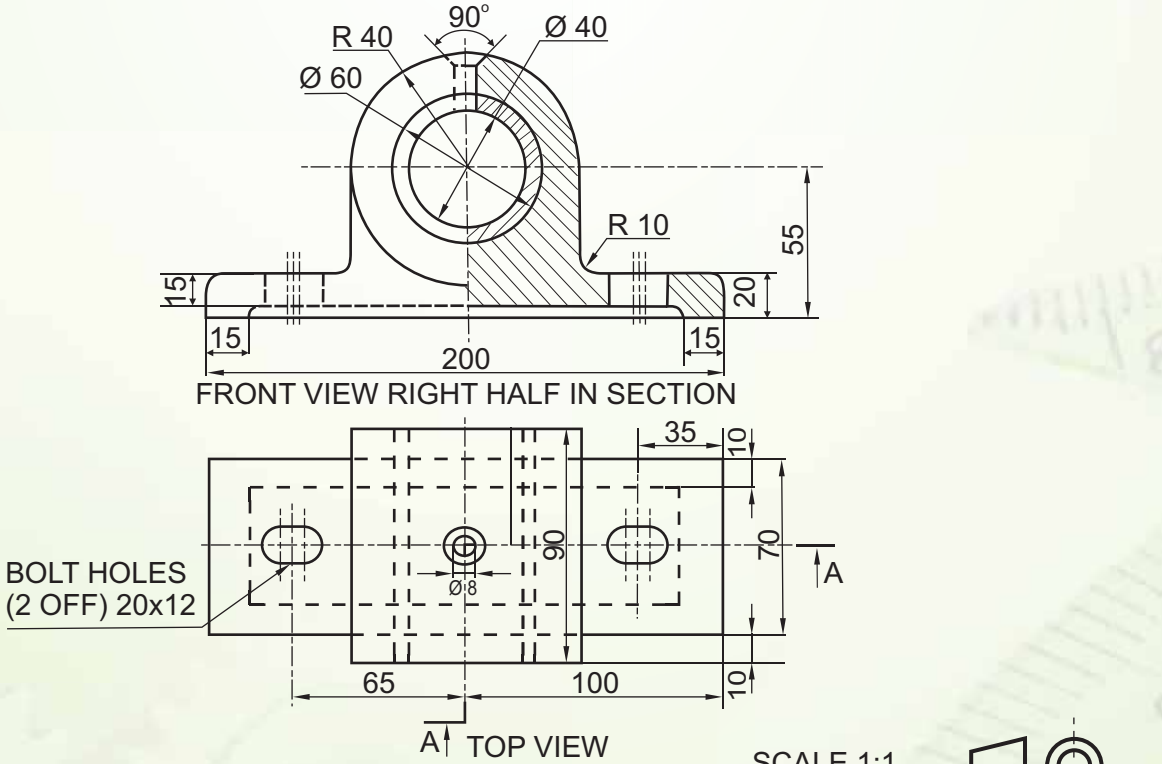

BUSHED BEARING

Fig: 3.6

Question: The figure given below shows the assembled front view and the side view of a Bushed Bearing. Disassemble (fig:3.7) the body and the bush and draw the following views to a scale 1:1, keeping the same position of both the body and the bush, with respect to H.P. and V.P.

a. Front view of the body, showing right half in section and its top view.

b. Front view of the bush, showing left half in section and its top view. Print titles of both and scale used. Draw the projection symbol. Give 8 important dimensions.

Note : Take: R4 Radius For All Fillets And Rounds

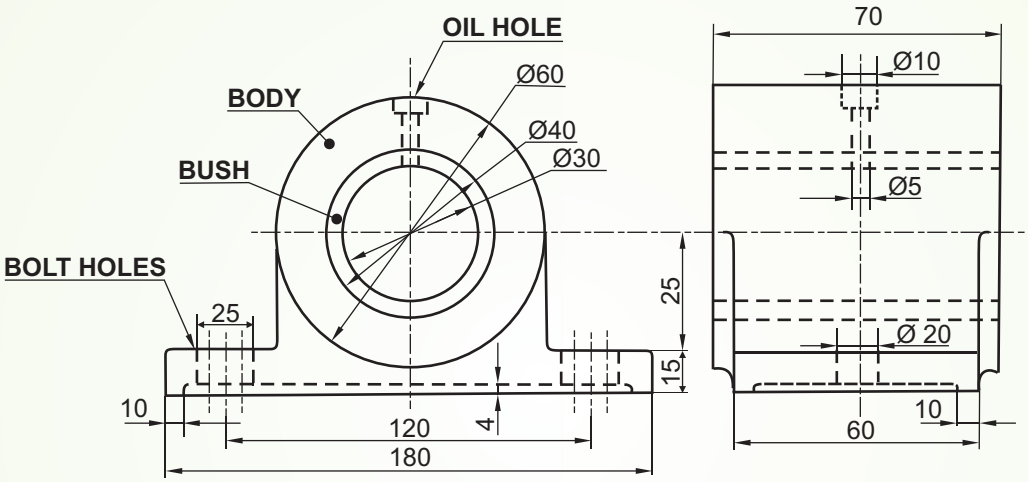

BUSHED BEARING

Fig: 3.7

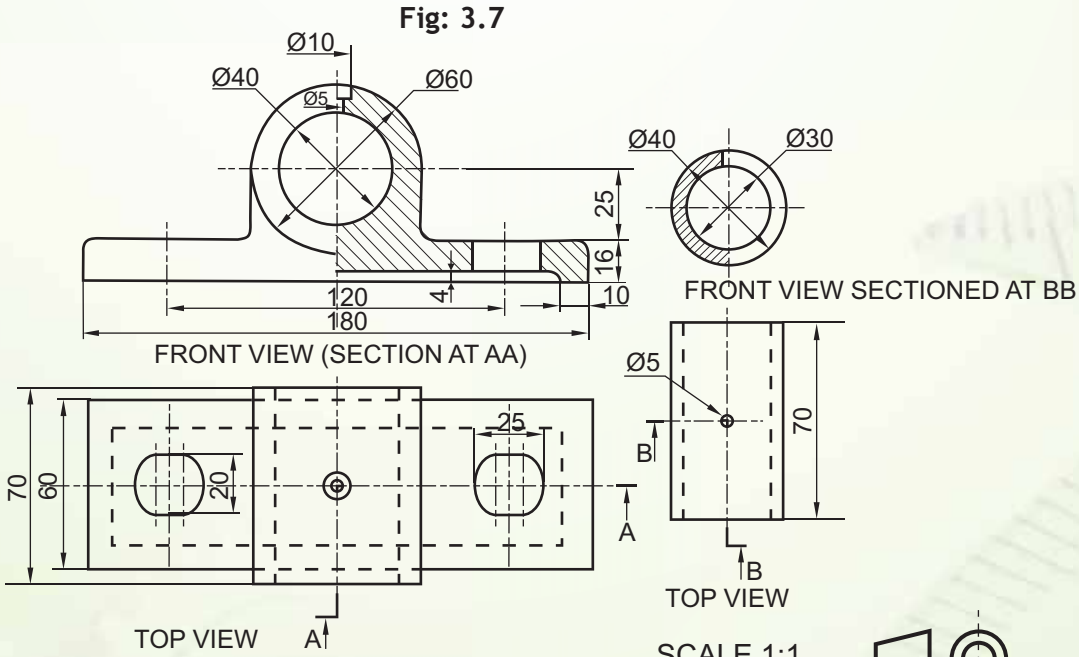

BUSHED BEARING

Fig: 3.8

OPEN BEARING

This bearing consists of a 'U' shaped cast iron body with the similar shaped collared brass, bronze or gun metal bush. The sole is recessed for better stability on the surface. This bearing is used for linear and zigzag shafts. The holes for the bolts in the sole plate are elongated towards the width. This bearing is useful for shafts rotating at slow speeds. Now, let us understand the different parts shown in the (fig : 3.9)

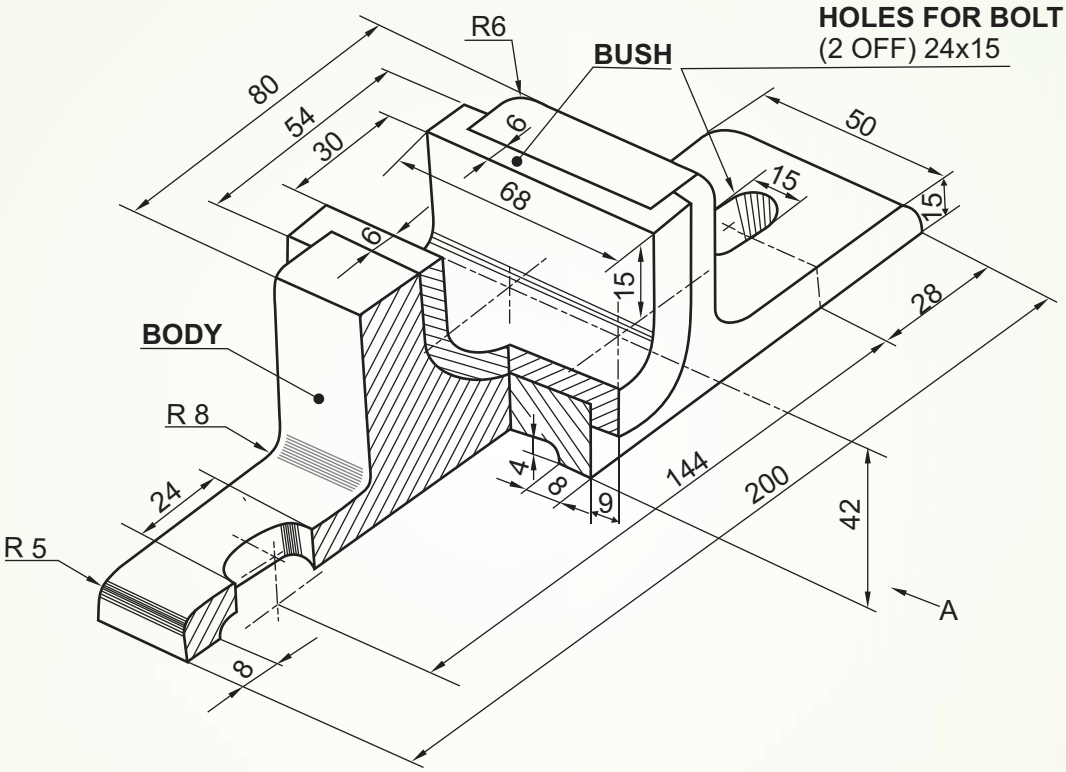

OPEN BEARING
Fig 3.9

Question: The figure given below (fig:3.10) shows the details of an 'Open bearing'. Assemble these parts correctly and then draw its following views to scale1 :1 :

a. Front view, right half in section.

b. Top view.

c. Side view as viewed from left.

Write heading and scale used. Draw projection symbol. Give '6' important dimensions.

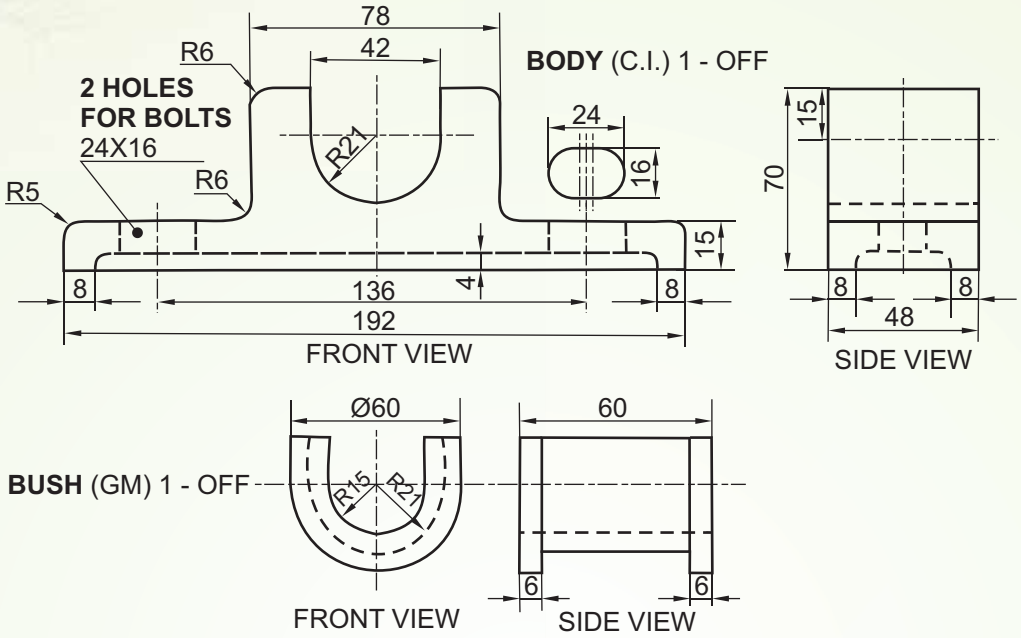

DETAILS OF OPEN BEARING

Fig: 3.10

Answer of fig. (3.10)

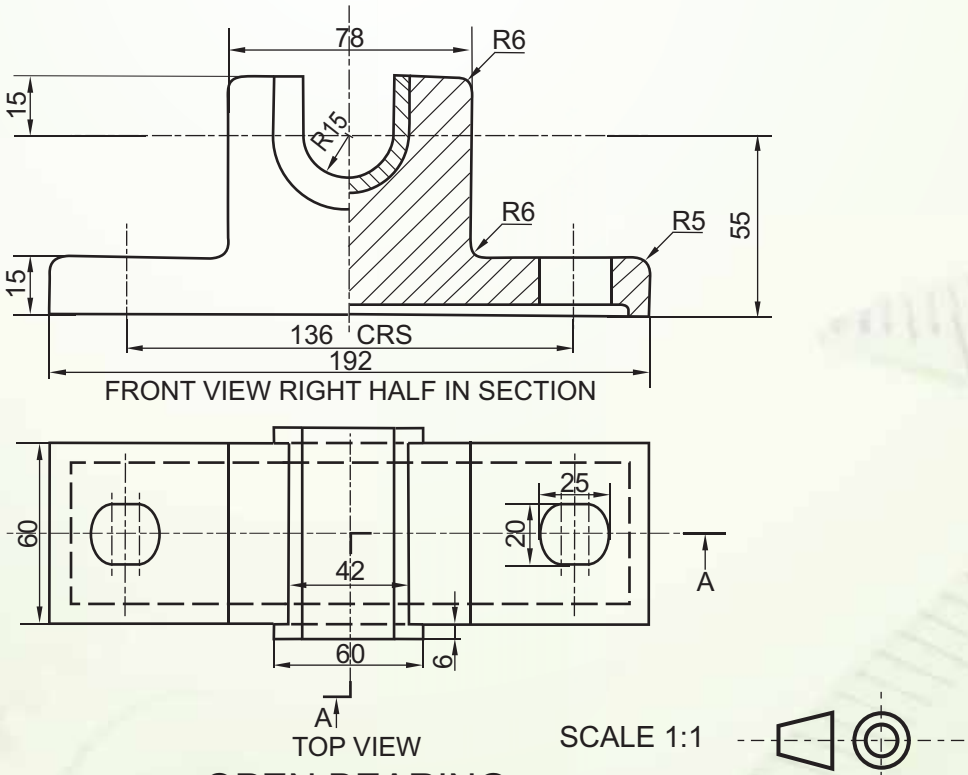

OPEN BEARING

Fig: 3.11

Question: The figure given below (fig 3.12) shows the assembly of an 'Open Bearing'. Disassemble the parts and draw the following views to scale 1:1 :

(a) BODY

(i) Front view, left half in section.

(ii) Top view, without section.

(b) BUSH

(i) Front view, left half in section.

(ii) Side view, viewing from left.

Print titles of both and the scale used. Draw the projection symbol. Give '6' important dimensions.

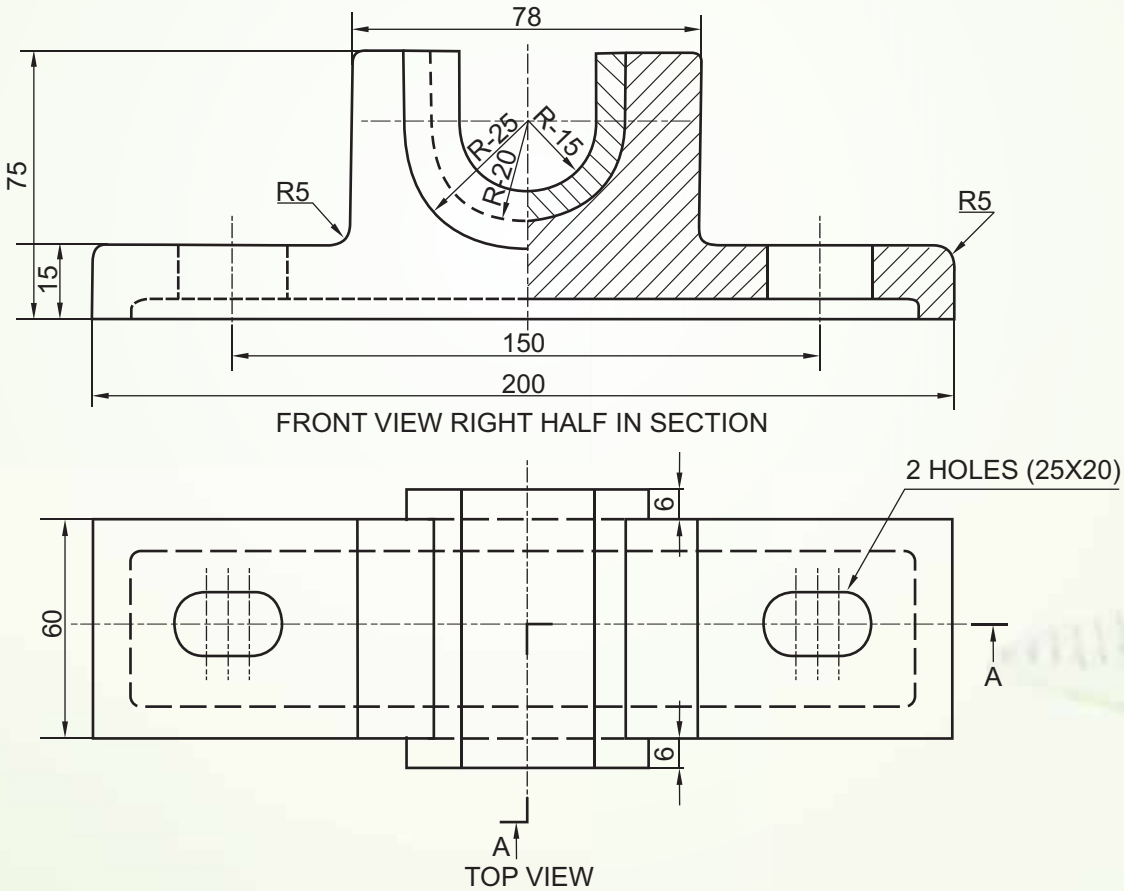

OPEN BUSH BEARING

fig 3.12

Answer of fig 3.12

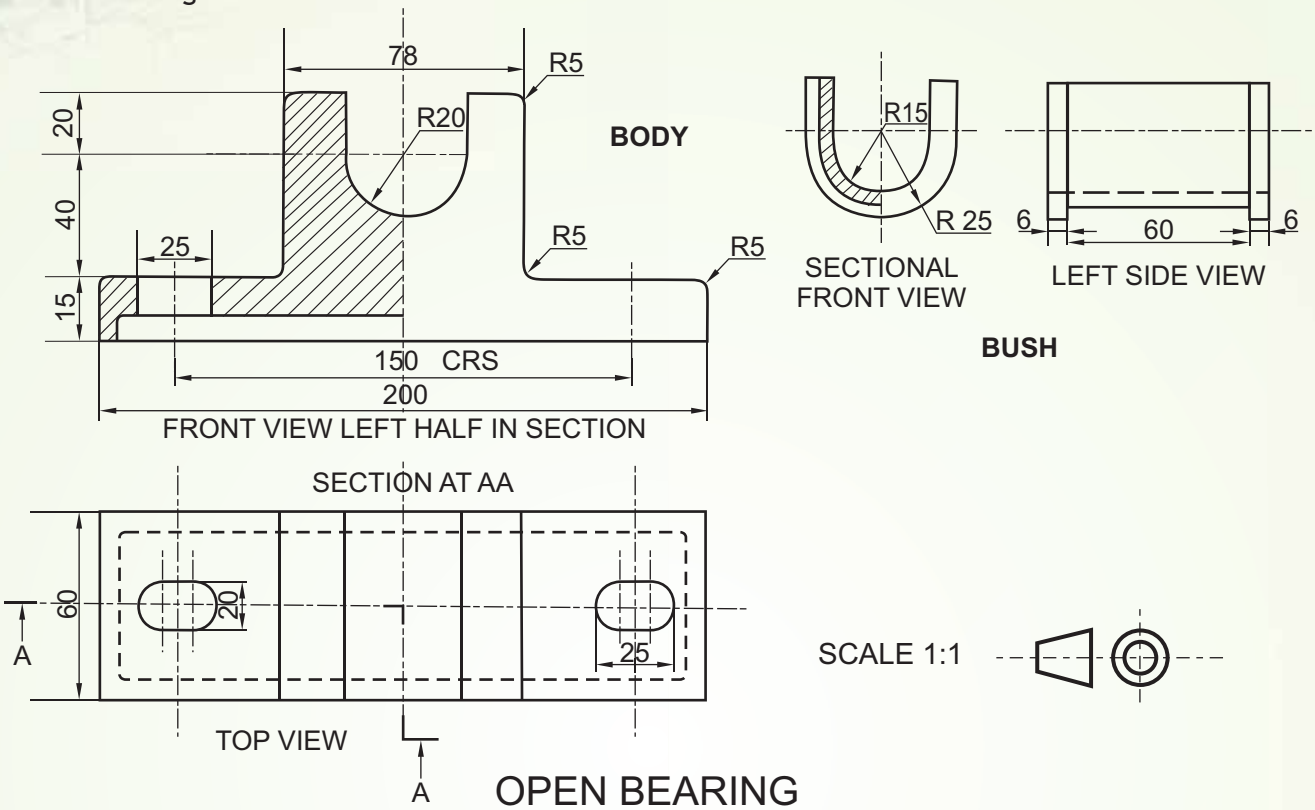

OPEN BEARING

fig 3.13

PLUMMER BLOCK OR PEDESTAL BEARING

The Plummer Block is also known as Pedestal Bearing. This bearing is widely used in textile, marine and some other industries. This bearing is useful for long shafts requiring Intermediate supports; these bearings are preferred in place of ordinary bush bearings. It was named after its inventor 'PLUMMER'. This bearing can be placed any where along the shaft length. It is used for shafts rotating at high speed and needing frequent replacement of brasses (also known as steps) due to the wear and tear of the brasses, which are made up of brass, phosphor- bronze or gun metal having raised collars at two ends for the prevention of the brasses from sliding along the axis, with the shaft. The shaft is made of mild steel. These brasses are made into two halves just to facilitate the easy assembly and disassembly of brasses and shaft. A snug at the bottom, fitting inside a corresponding hole in the body, prevents their rotation. The body is made up of cast iron with rectangular sole plate having elongated holes for the adjustment. In two long holes square mild steel bolts with hexagonal nuts and check nuts are used to tighten the cap and brasses. The cap is made up of cast iron. The cap while resting on the upper brass fits inside the body with its body cap at its sides "but does not sit on it". These brasses are made into two halves and are prevented from rotating by the use of a snug in the middle of the brasses. A counter sunk hole is provided in the top cap and brass to hold lubricant which is necessary for reducing the friction between the shaft and the brasses, which are collared to avoid axial movement. Please examine the given figure for understanding these details.

DETAILS OF PLUMMER BLOCK OR PEDESTAL BEARING.

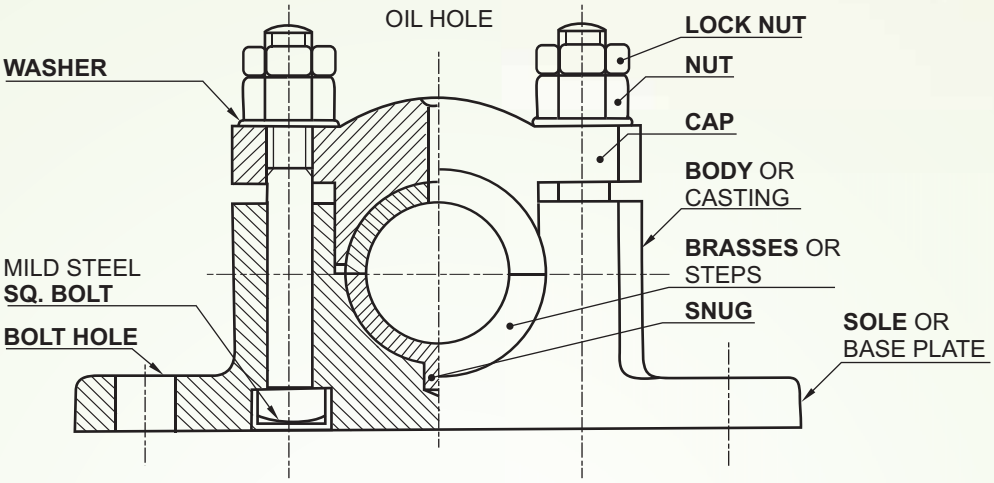

PLUMMER BLOCK

Fig 3.14

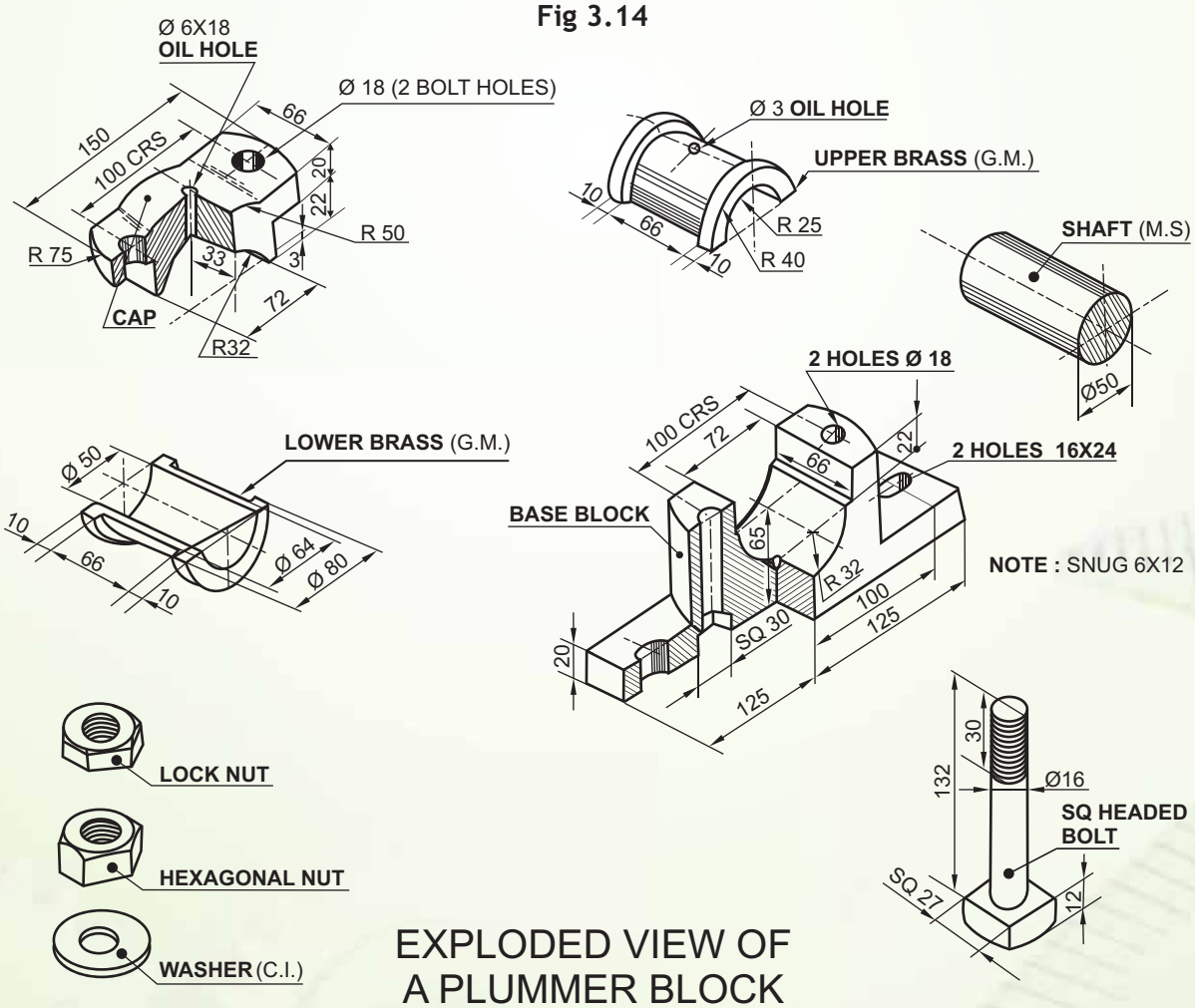

EXPLODED VIEW OF A PLUMMER BLOCK

Fig 3.15

NOTE : As per our syllabus, we are going to only draw the front view of the Plummer Block.

Question: The figure given below (fig : 3.16) shows the details of a Plummer Block. Assemble the parts correctly and then draw to scale 1:1, the front view, right half in section. Print title and scale used. Give '8' important dimensions.

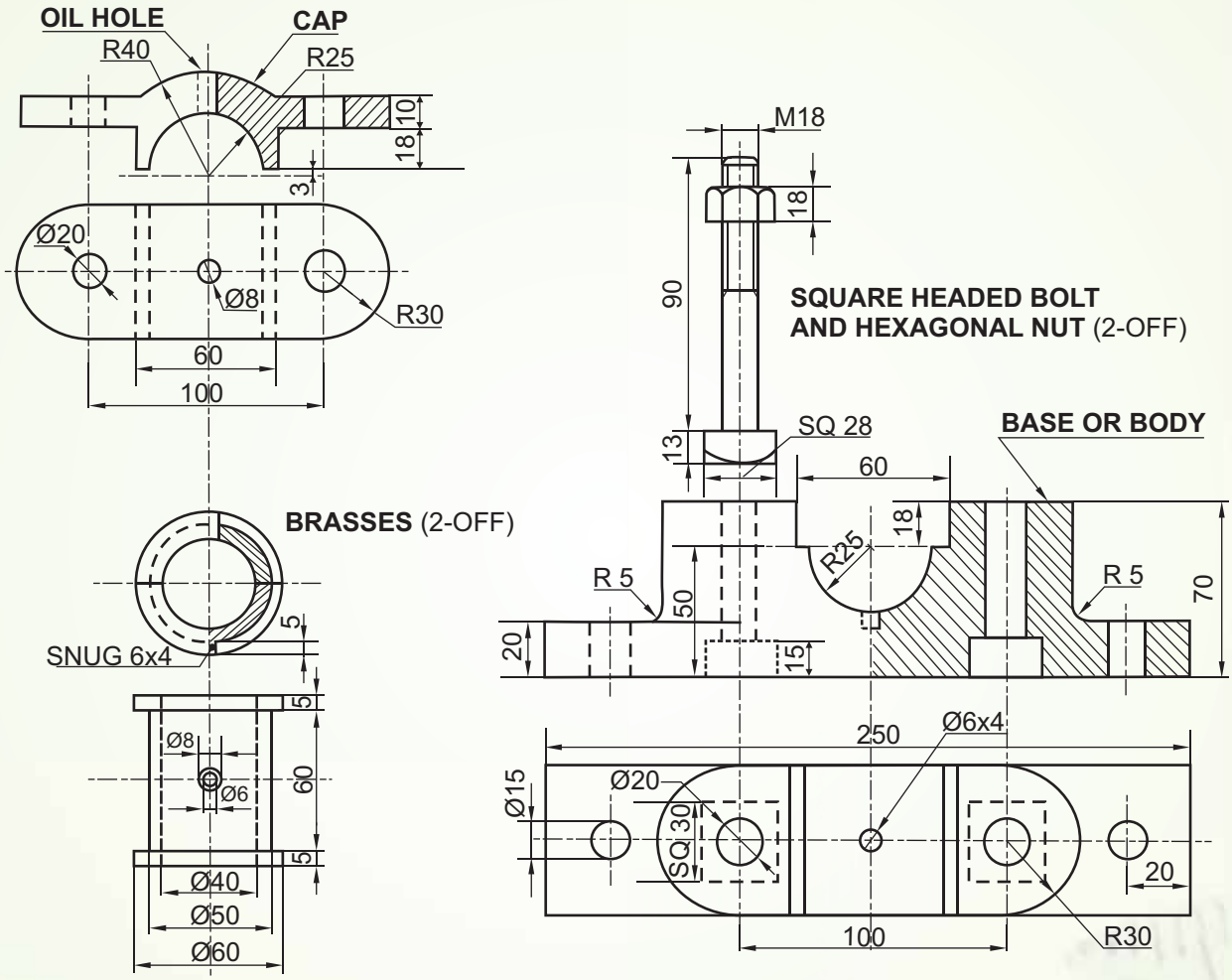

PLUMMER BLOCK

Fig 3.16

Answer of fig. 3.16

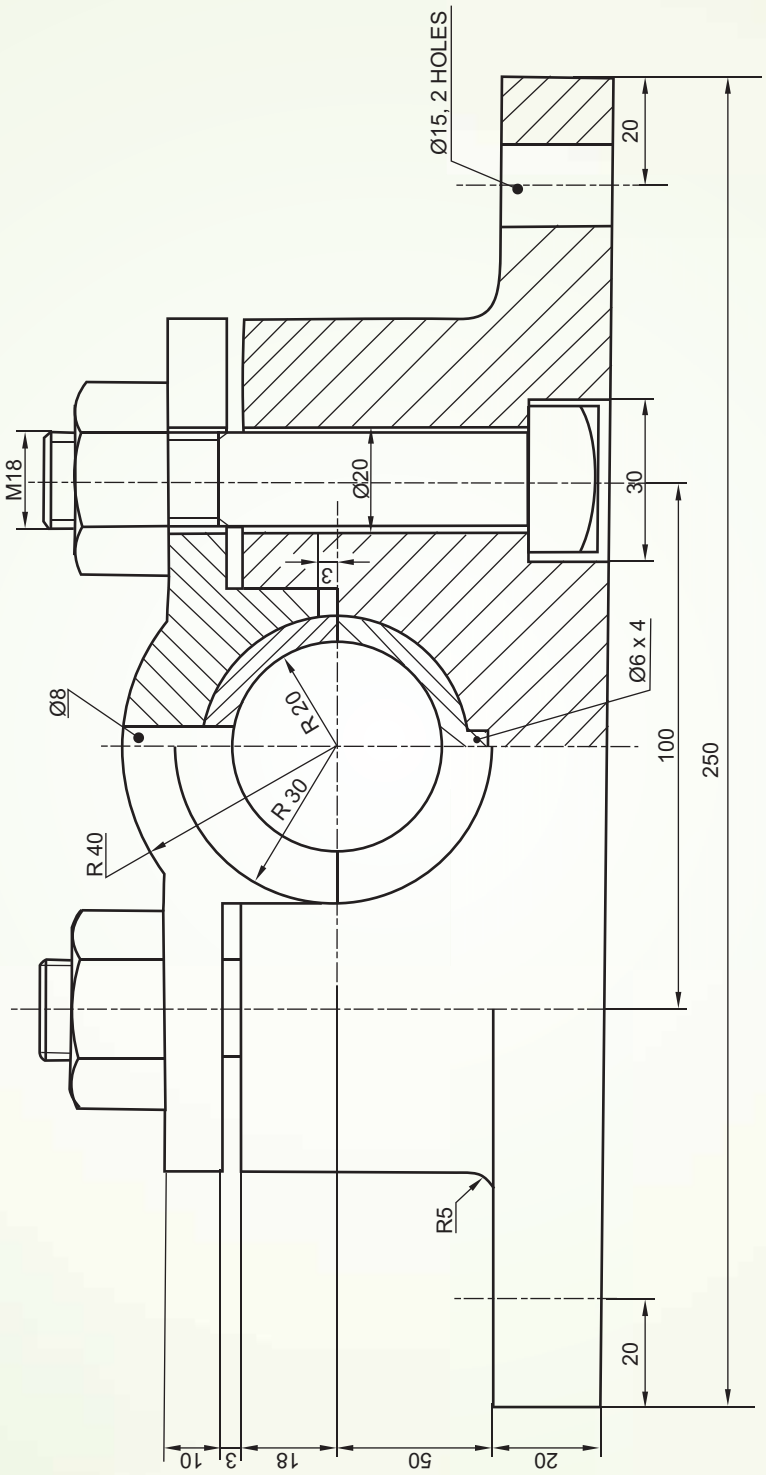

FRONT VIEW (RIGHT HALF IN SECTION)
PLUMMER BLOCK (ASSEMBLY)

FIG: 3.17

Question: The figure given below (fig:3.18) shows a Pictorial view of a Plummer Block. Draw the sectional front view showing left half in section. Print title, scale used and give '8' important dimensions.

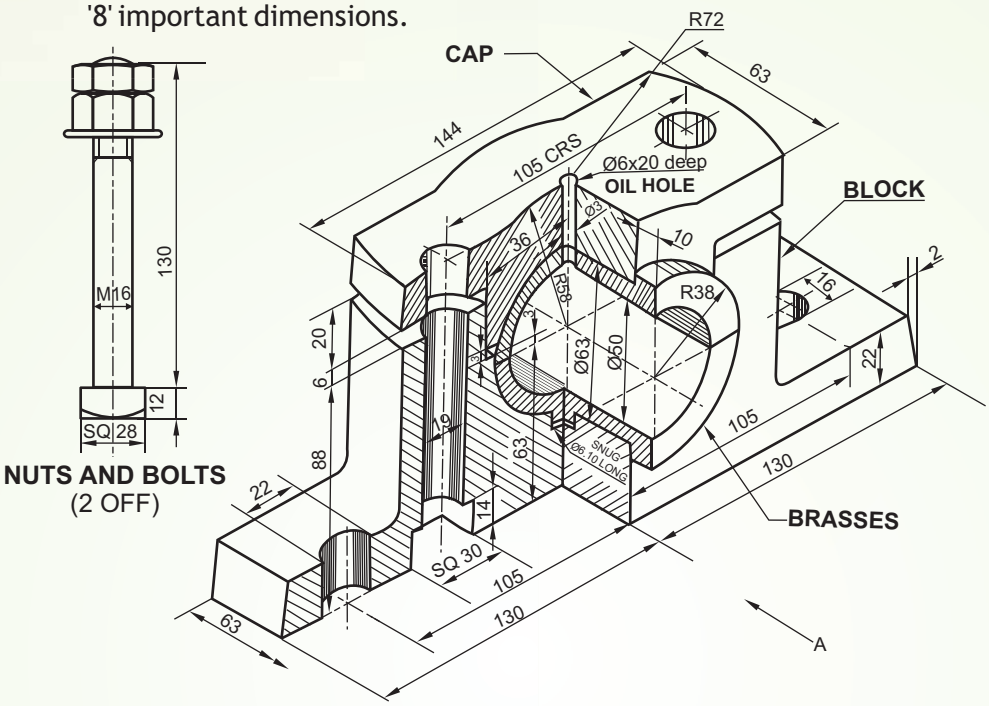

PLUMMER BLOCK

FIG: 3.18

Answer of (Fig: 3.18)

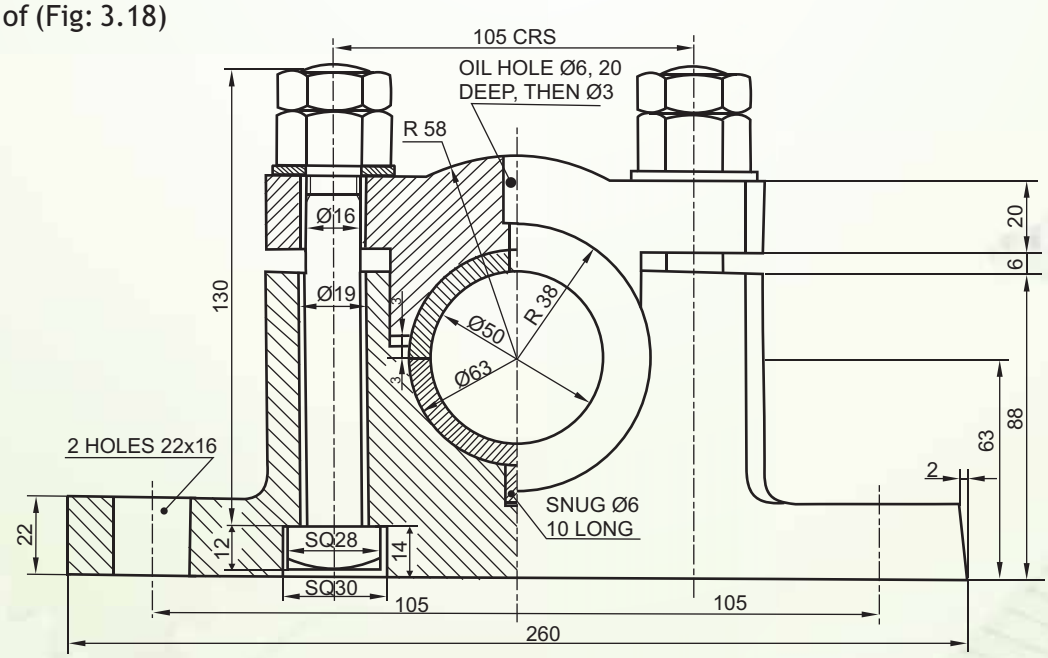

LEFT HALF SEC. FRONT VIEW

SCALE 1:1

PLUMMER BLOCK

Fig. 3.19

FOOTSTEP BEARING OR PIVOT BEARING

This bearing is used for supporting the lower end of the vertical shaft. This bearing is made up of a cast iron body with a rectangular or square recessed sole to reduce machining area. Generally, the sole is provided with four oval or elongated holes for the adjustment of the bearing. A Gun Metal hollow bush having a collar at its top end is placed and is prevented from rotation by the use of a grub screw or a snug just below the neck of the collar. This collar serves two purposes, one it prevents the hollow round bush to go further down in the body of the bearing and secondly it provides a round vessel at the neck of the round bush to hold lubricant. The bearing body and the hollow bush are recessed so as to form fitting strips. A concave or convex hardened steel disc is placed below this round hollow bush to support the shaft. This disc is also prevented from rotation by the use of a snug or a pin which is half inserted in the body of the bearing and half in the disc but away from the centre. The only draw back of this bearing is that there is no proper lubrication, thus unequal wear and tear is there on the bottom round disc. Examine the details as shown below.

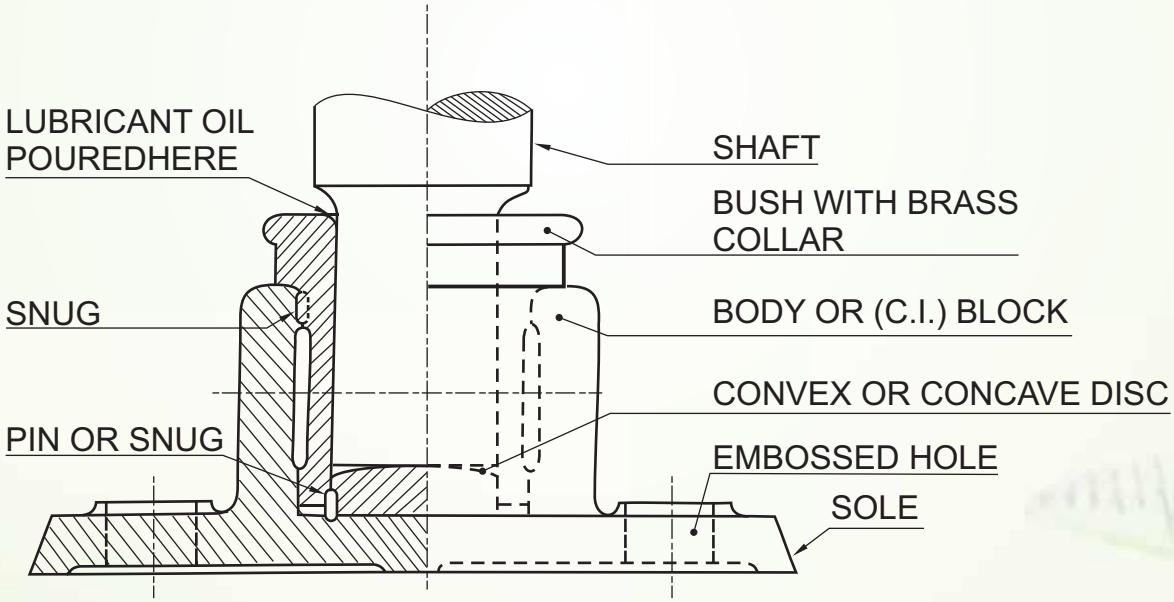

SCALE 1:1

DETAILS OF A FOOTSTEP BEARING

FIG: 3.20

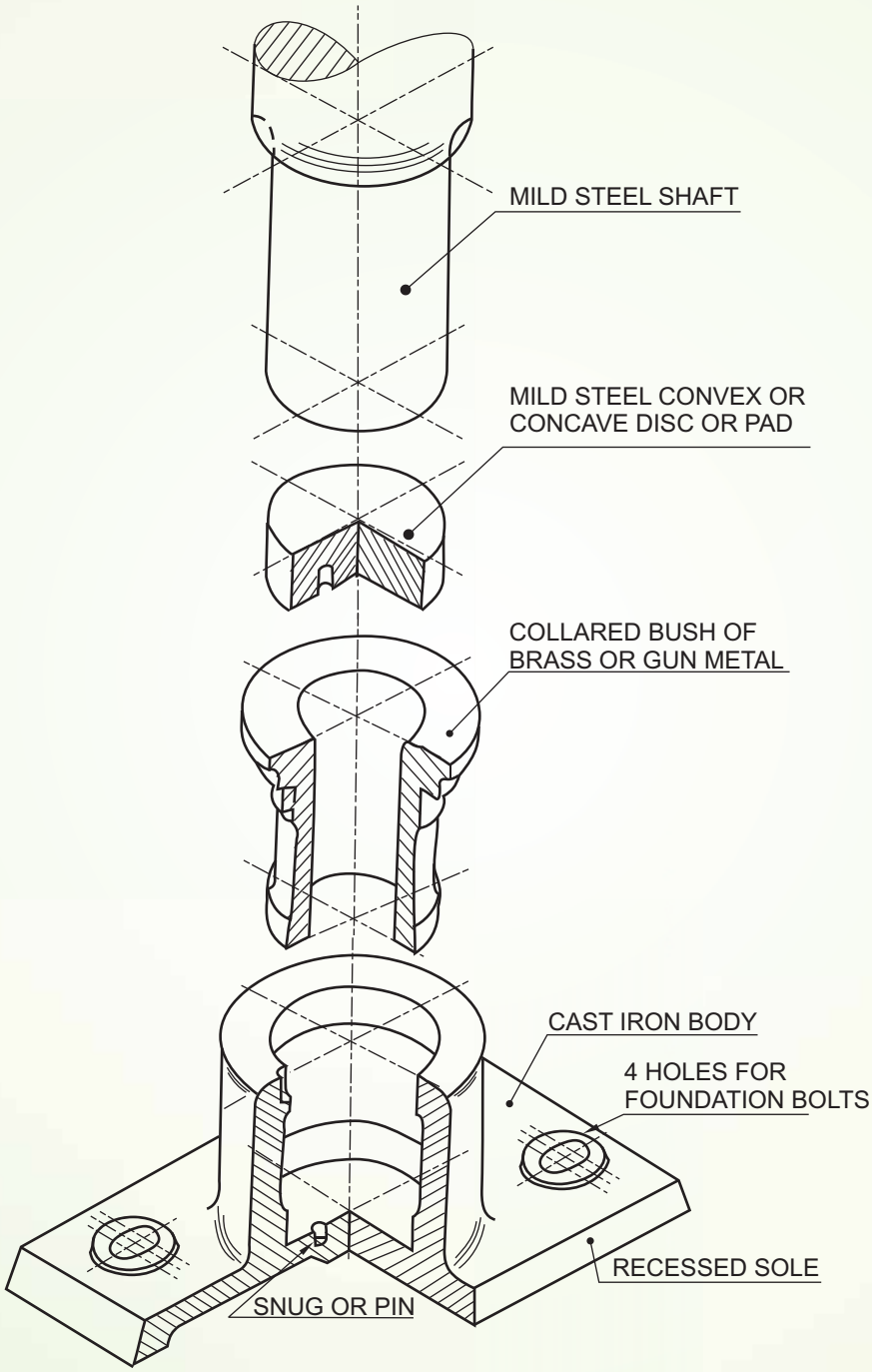

EXPLODED VIEW OF A FOOT STEP OR PIVOT BEARING.

FIG. 3.21

NOTE: As per our syllabus guide lines, we are supposed to draw the front view of the assembly of Foot Step Bearing'.

Question: The figure given below (fig: 3.22) shows the parts of a Foot Step Bearing. Assemble these parts correctly and then draw the Front View, left half in section to a scale full size. Print title and scale used. Give '8'important dimensions.

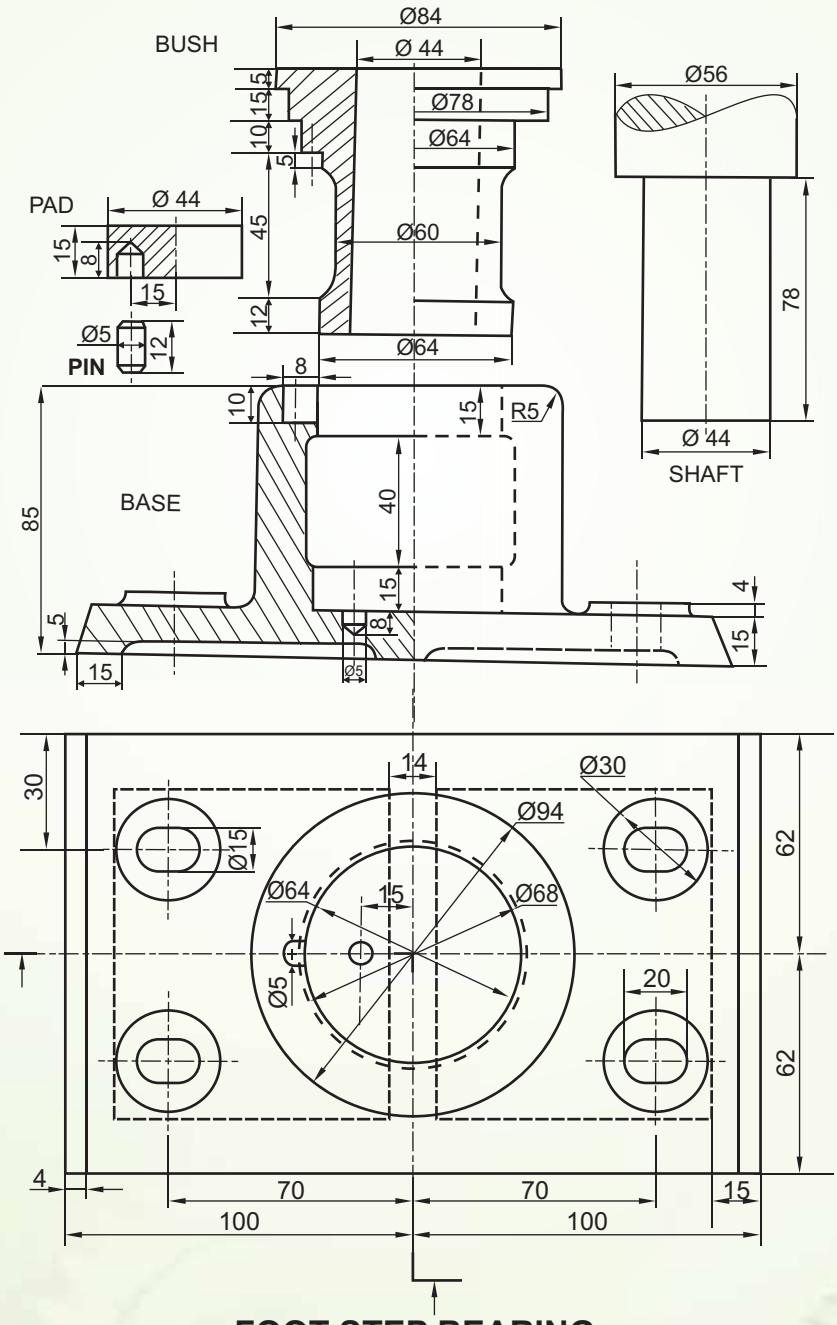

FOOT STEP BEARING

FIG. 3.22

Answer of (Fig: 3.22) FRONT VIEW

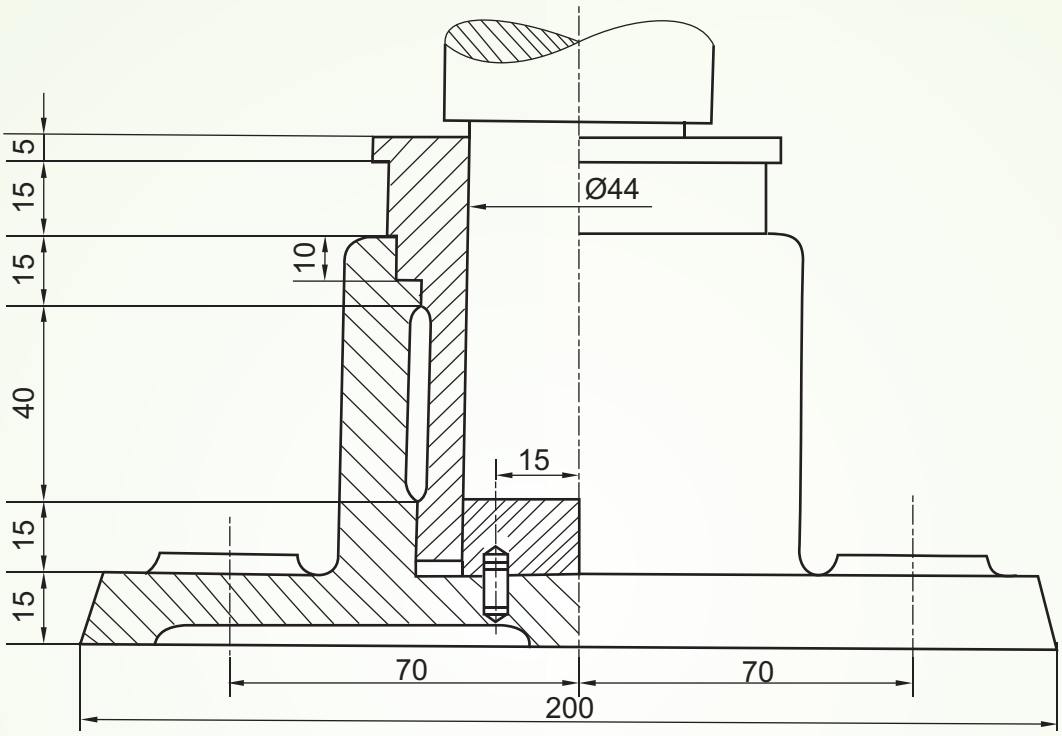

FRONT VIEW (LEFT HALF IN SEC.) SCALE 1:1

FOOTSTEP BEARING

Fig 3.23

Question: The figure given below (fig:3.24) shows the parts of a Foot Step Bearing. Assemble the parts correctly and then draw the Front View, showing right half in section, using the scale 1:1;

Print title and scale used. Give '8' important dimensions.

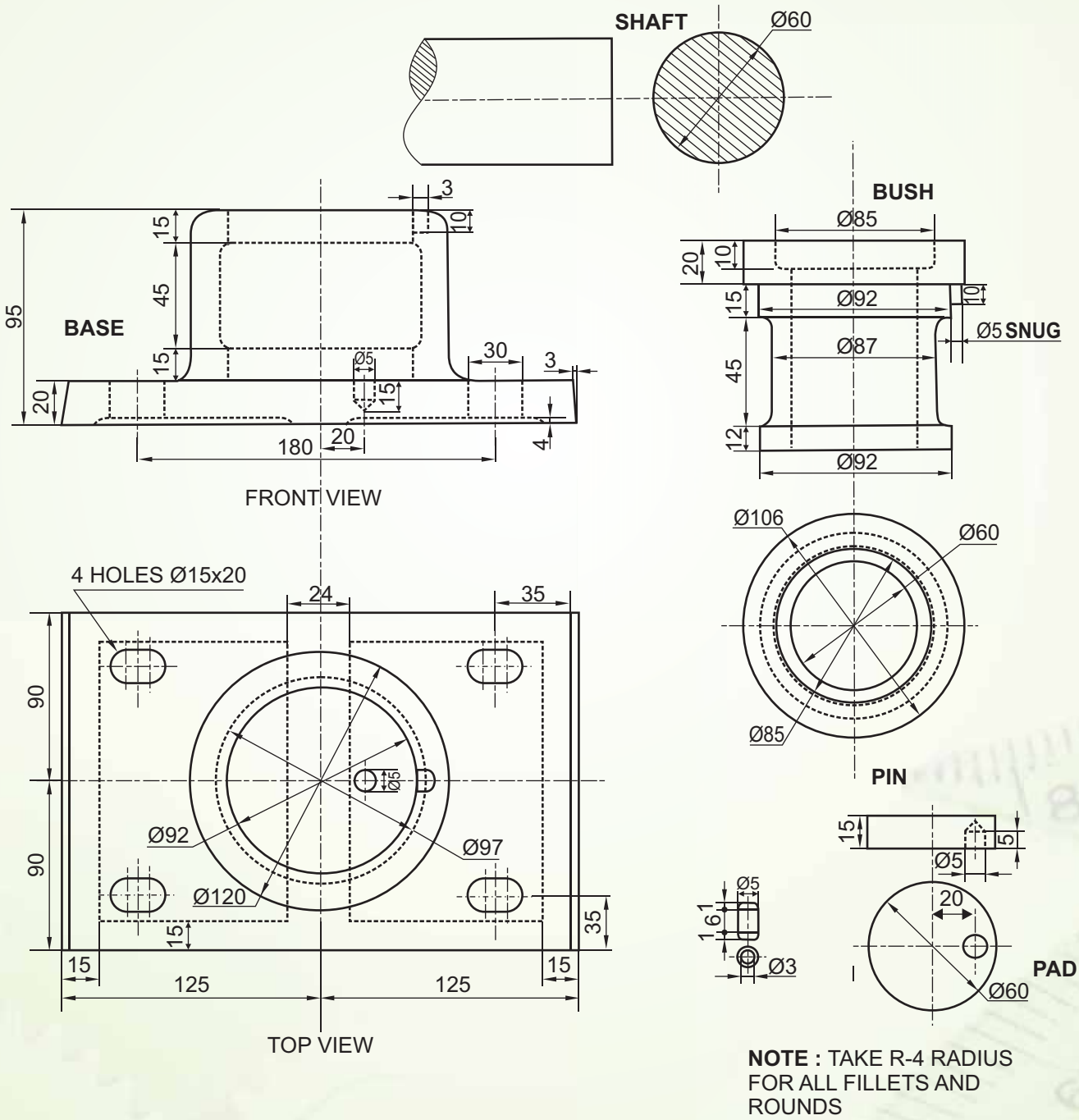

NOTE : TAKE R-4 RADIUS FOR ALL FILLETS AND ROUNDS

DETAILS OF A FOOT STEP BEARING

Fig 3.24

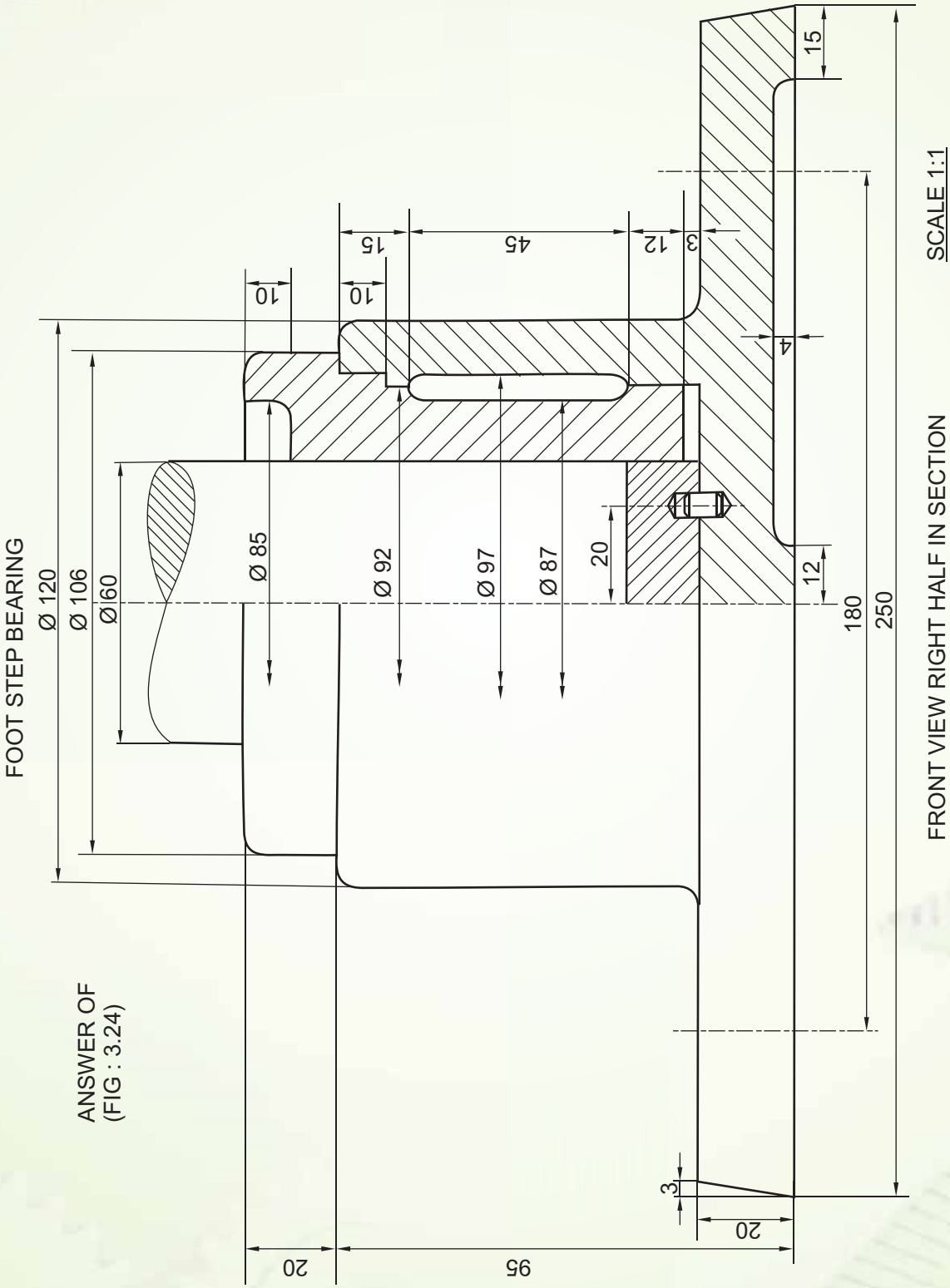
FOOT STEP BEARING
Ø 120
Ø 106
Ø 60
Ø 85
Ø 92
Ø 97
Ø 87
20
10
10
15
45
12
3
4
15
12
180
250
SCALE 1:1
FRONT VIEW RIGHT HALF IN SECTION
ANSWER OF
(FIG : 3.24)
3
20
95
20

Fig 3.25

CHAPTER 4

ROD JOINTS

All of you have seen a tractor and its trolley/ trailer. The trolley can be easily joined or removed from the tractor as per the need. Have you ever noticed that how this trolley is joined or detached from the tractor? This work is made so simple by a joint between the tractor and the trolley using a pin or a cotter. A fork end is there at the back of the tractor and an eye end is there in front of the trolley and a round rod is inserted in between these two to make the joint. In industry also different cotter joints are used some of these we shall learn in the following paragraphs. First of all we shall learn about the cotter.

Fig 4.1

COTTER:

A cotter is a flat rectangular cross section wedge-shaped piece or bar of mild steel block which is uniform in thickness but tapering in width on one side in general. It is used to connect rigidly two rods, whose axes are collinear and which transmit motion in the axial direction (tensile or compressive forces) without rotation. The cotter is inserted perpendicular to the axes of the shafts which are subjected to tensile forces. Cotter provides rigid joint support.

DIMENSIONS OF A COTTER:

Let 'D' be the diameter of connecting rods.

Average dimension of the cotter (d) = 1.3D

Thickness of cotter (t) =0.3D

Length of cotter (l) = 3.5D to 4D.

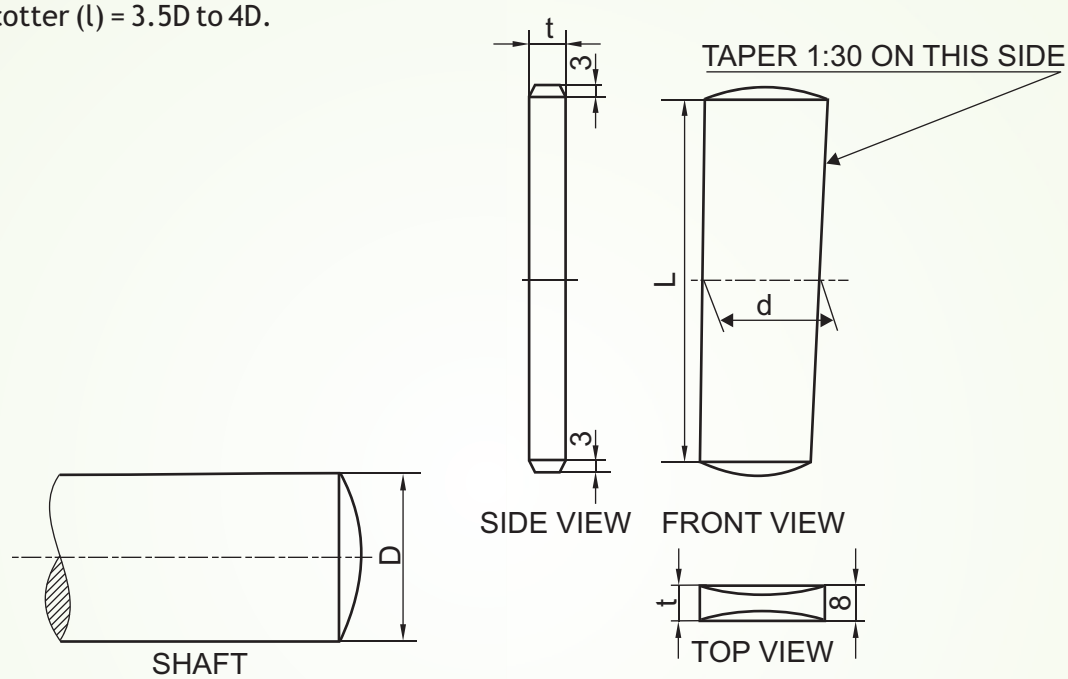

COTTER

Fig 4.2

These types of joints are simple in design and need very less application of tools. These are used to connect the end of a rod of a shaft. The end of the bar has a hole in it and it is called a lug. The shaft carries a hole. This shaft is locked in place by a smaller pin that passes through the side of the lug and partly or completely through the shaft itself. This locking pin is named as a cotter, which sometimes is also applied to the whole joint. The cotter joint is a temporary fastening, which allows the assembly and disassembly of a unit without damaging the fastened elements of connecting components. In this type of joint the parts are held together by frictional force.

The obvious example is of a bicycle where both pedal bars separately locked by a cotter pin, on their common driving shaft having the sprocket to the wheel.

Steel is the most common material used for this application.

Examples: Typical applications of the cotter joint are fastening of piston rods and cross heads in steam engines, yokes in rods, tool fixtures and for services of similar kinds etc.

USE OF COTTER JOINT

The joint is useful in the following conditions:

(i) To connect a rod directly with a machine, so as to transmit a force to the machine through the rod or vice- versa.

(ii) When it is desired to increase the length of the rod.

(iii) To connect two rods rigidly in the direction of their length.

USE OF TAPER IN COTTER JOINT:

The taper in the cotter is provided to take the advantage of wedging action (friction locking). The taper also keeps the joint alive even after some wear in the joint has taken place as the gap generated due to the wear automatically filled up by the self travel of the cotter. This travel is assisted due to the taper given in the cotter. Taper helps in insertion into the position and withdrawal and lateral adjustment of connected parts. The taper should not be too large causing self removal of the cotter under the external load, but if the large taper is essential, in a case when frequent disassembly is required, locking devices such as set screw/lock pin etc. become necessary to secure the cotter in position against the slackening or removal of the cotter from its position. Generally, the taper of 1: 30 is given and is decided on the basis of the angle of friction between cotter and rods material. The taper angle should not be greater than the angle of friction. The thickness of the cotter is generally kept equal to one fourth and one fifth of its width in the centre. The width of the slot is made 3 to 5 mm bigger than the cotter. When the cotter fits into the slot, the central portion of the cotter comes in contact with spigot and pushes it into the socket. These forces on the contacting surfaces prestress the joint and provide the required force for friction locking of the bearing surfaces. Finally, the edges of the cotter and the edges of the slot are rounded.

In our syllabus the assembly and disassembly of cotter joints for circular and square rod are there.

We shall learn that there are three cotter joints for connecting the circular rods:

a. Sleeve and Cotter joint

b. Socket and Spigot joint and

c. Knuckle joint (only sectional front view is in our syllabus).

Also in our syllabus there is only one cotter joint for joining square or rectangular rods and it is called:

d. Gib and cotter joint.

Now, let us learn more about the Sleeve and Cotter Joint

SLEEVE AND COTTER JOINT:

Sleeve and cotter joint is used to connect two round rods or sometimes to connect two pipes/tubes. The rods are forged and increased in diameter to some length just to compensate for the loss of material, for making rectangular hole, accommodate the rectangular tapered cotter in each rod. The ends of both the rods are chamfered to avoid burring and easy insertion in the hollow steel sleeve (socket/cylinder/muff). Both the rods are of the same dimensions. A hollow sleeve is passed over both the rods and has two rectangular holes for the insertion of cotter at right angle to the axes of the rods. The cotters are automatically adjusted due to the extra margin given for the clearance in the rod and the sleeve. The relative position of slots is such that the driving in of the cotters tends to force the rods towards each other in socket or hollow sleeve. When sleeve and rods are subjected to axial tensile force then the cotter is subjected to shearing force, these joints are useful for light transmission of axial loads.

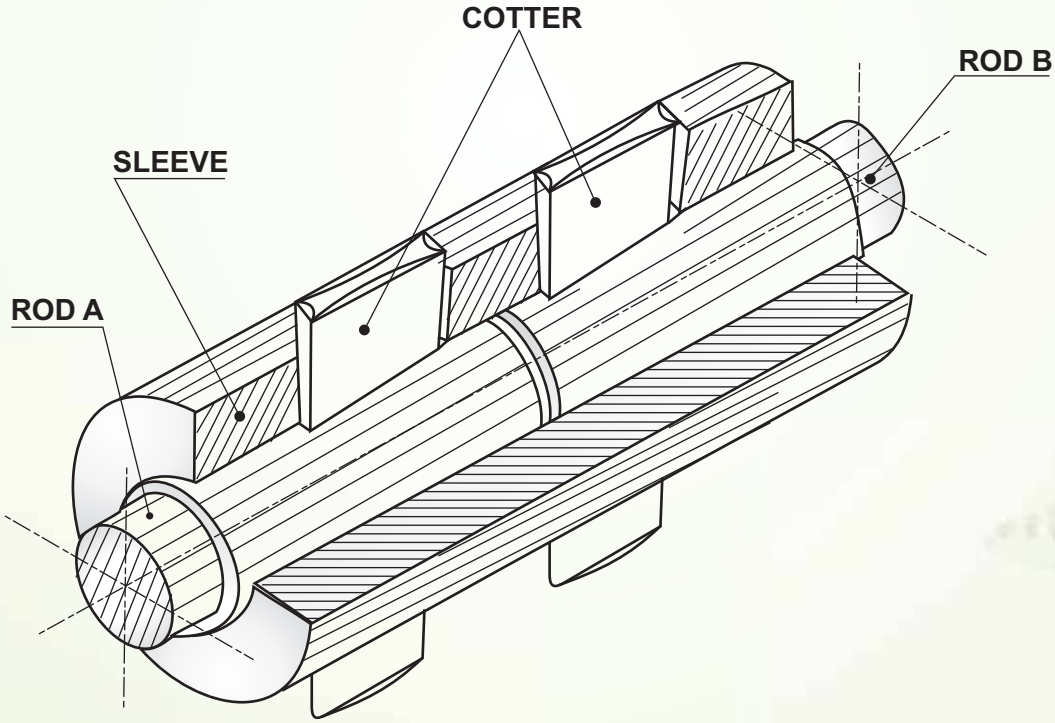

SLEEVE AND COTTER JOINT

Fig 4.3

Dimensions of a Sleeve and Cotter Joint in terms of diameter of the rods (d)

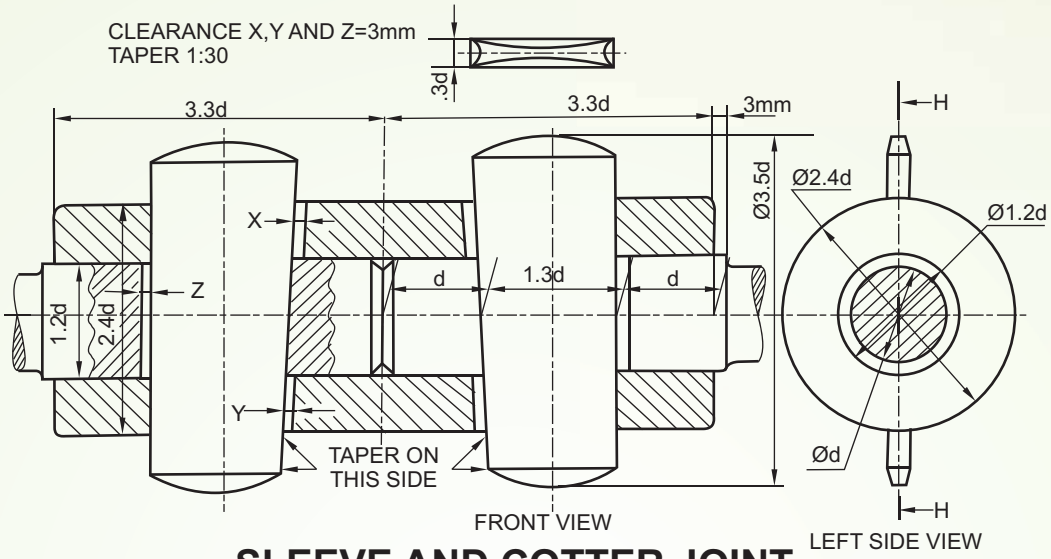

SLEEVE AND COTTER JOINT

Fig 4.4

Question: Figure given below (fig : 4.5) shows the parts of a Sleeve and Cotter Joint. Assemble the parts correctly and then draw the following views to a scale 1 : 1

(a) Front view, upper half in section.

(b) Side view, viewing from the left.

Print title and scale used. Draw the projection symbol. Give '8' important dimensions.

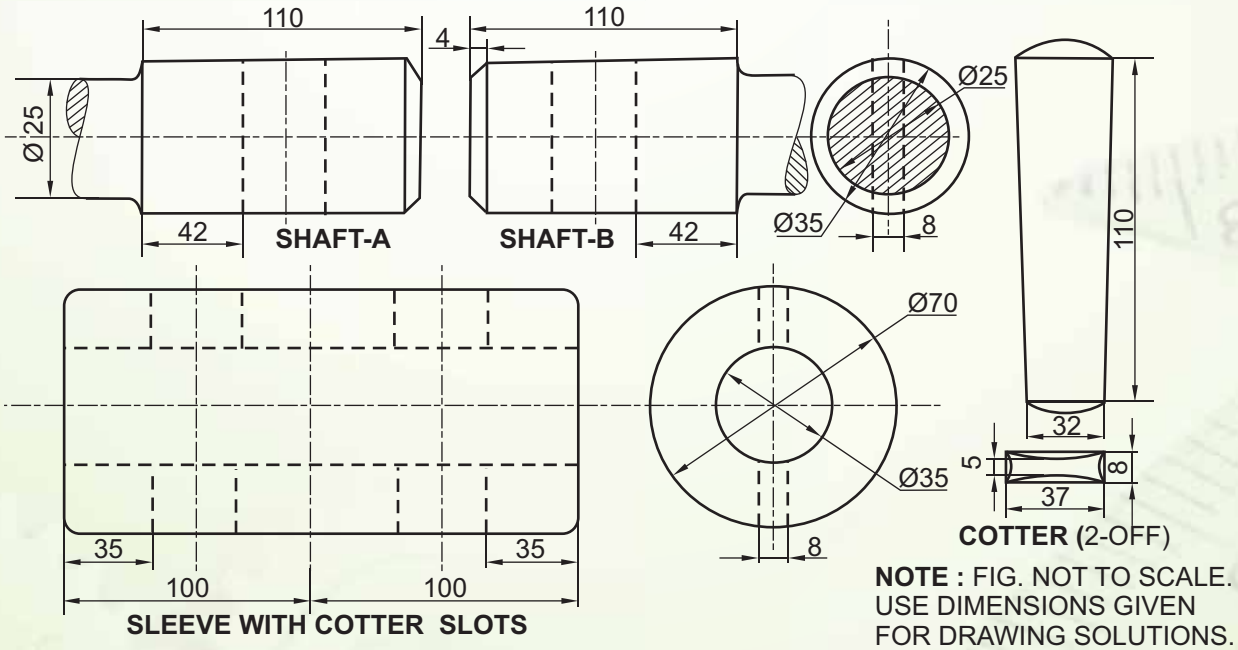

SLEEVE AND COTTER JOINTS

Fig 4.5

Solution of fig : 4.5

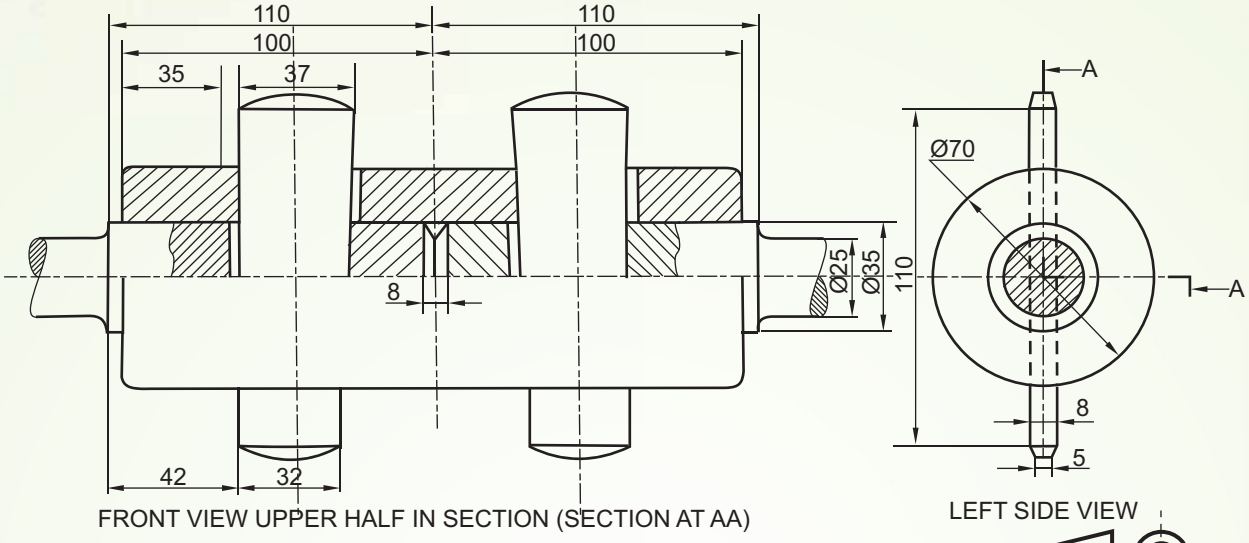

NOTE : ALL FILLETS AND ROUNDS : R4

SCALE 1:1

SLEEVE AND COTTER JOINT

Fig: 4.6

Question: The figure given below (fig: 4.7) shows the assembly of a Sleeve and Cotter Joint Disassemble the following parts and draw the following views to a full size scale.

(a) F.E. of the sleeve and S.E. viewing from left.

(b) F.E. of Rod A and Rod B and S.E. viewing from left.

(c) F.E. of cotter in vertical position and the plan.

Print titles and scale used. Draw the projection of symbol. Give 8 important dimensions.

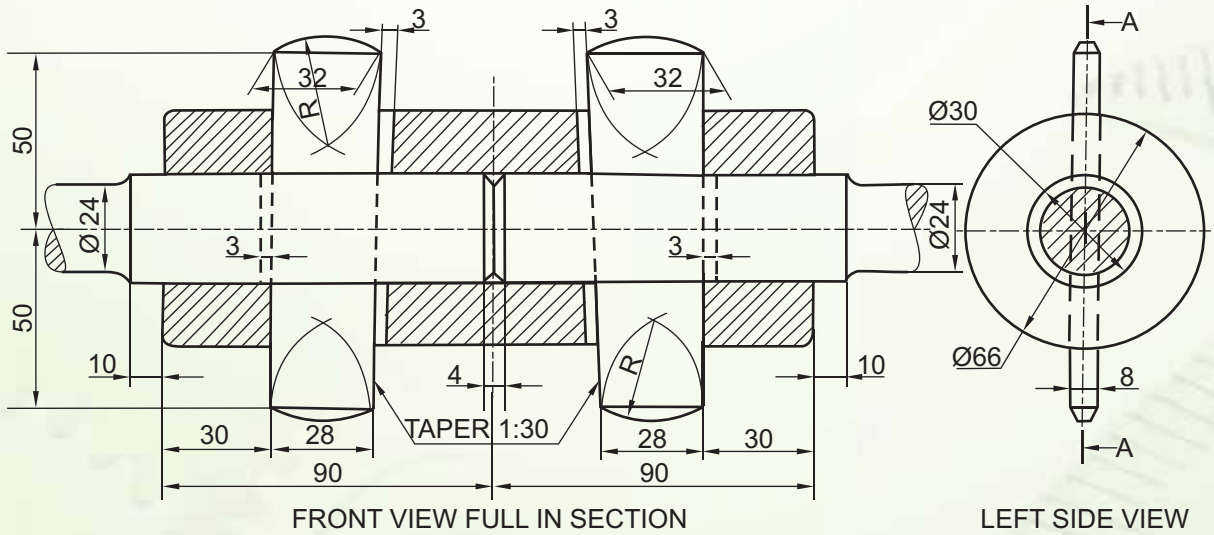

SLEEVE AND COTTER JOINT ASSEMBLY

Fig 4.7

Answer of fig 4.7

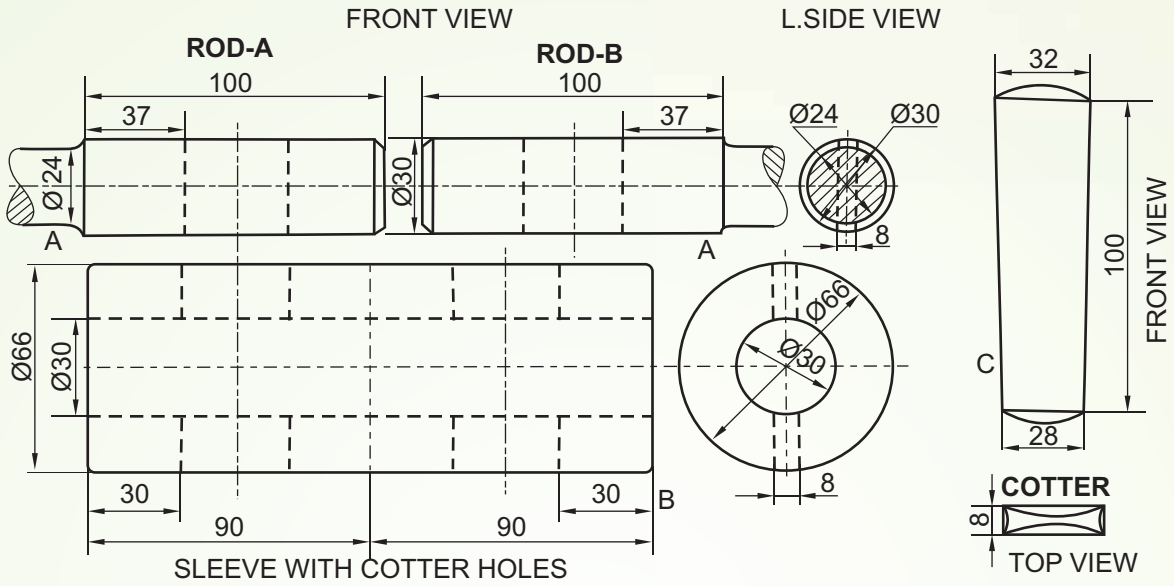

SLEEVE AND COTTER JOINT

Fig 4.8

Question: Figure given below (fig: 4.9) shows the exploded drawing of a Sleeve and Cotter Joint. Assemble the parts correctly and then draw the following views to scale 1:1

(a) Front view full in section.

(b) Side view, viewing from the left.

Print title and scale used. Draw the projection symbol. Give '8' important dimensions.

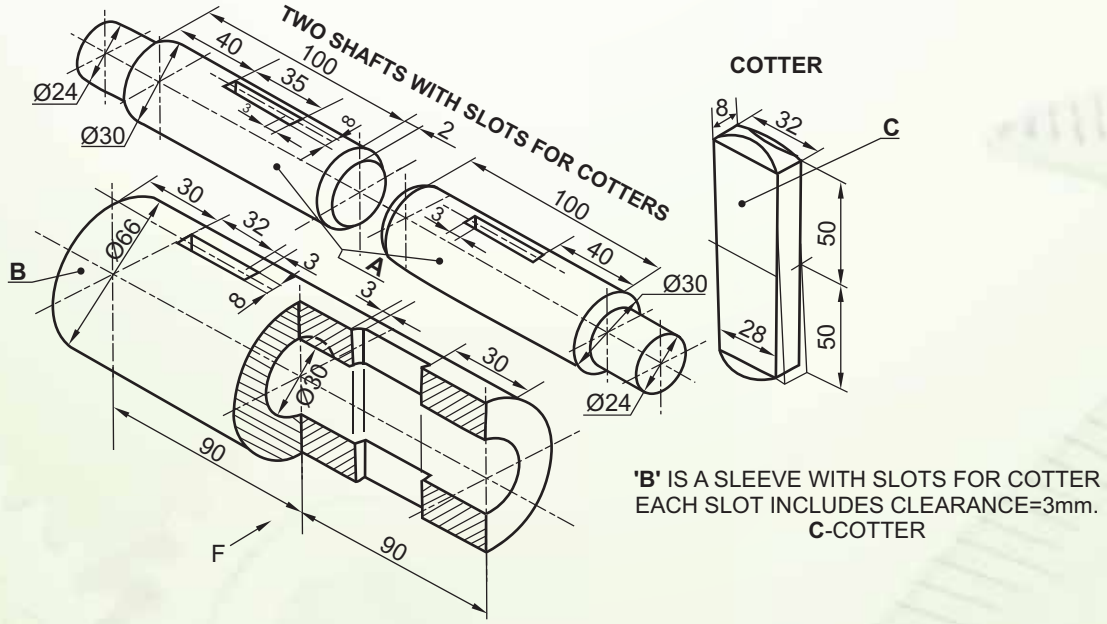

Fig 4.9

Answer of fig. 4.9

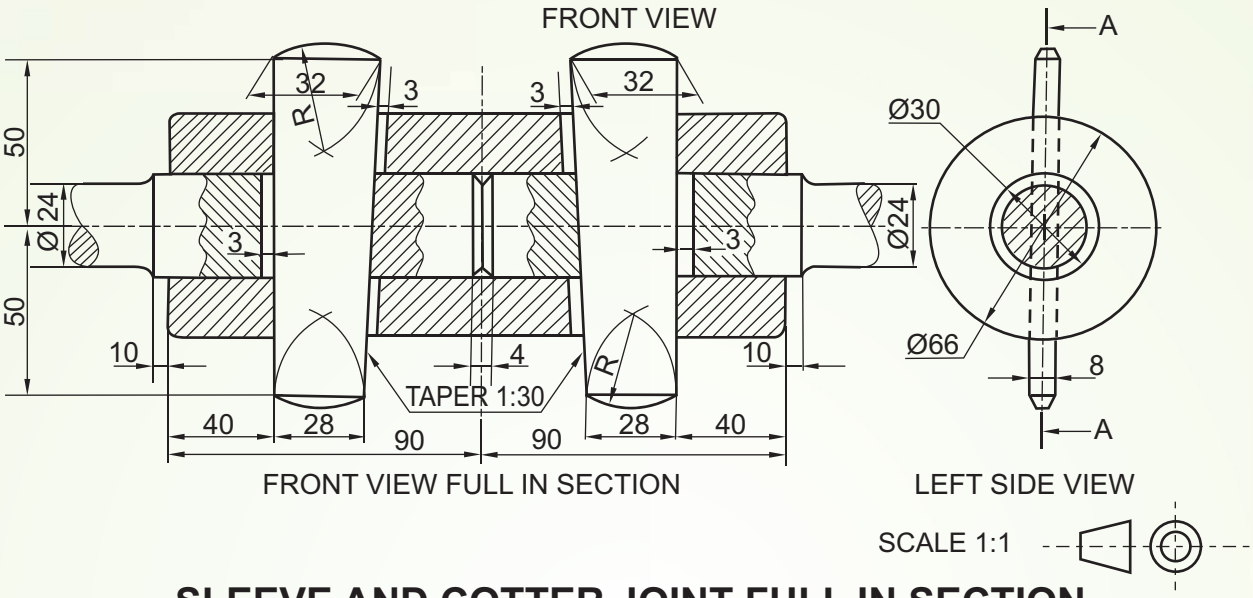

SLEEVE AND COTTER JOINT FULL IN SECTION

Fig 4.10

SOCKET AND SPIGOT JOINT

Socket and Spigot Cotter Joint is connecting two rods in such a way that it can transfer axial compression or tensile load. In this case one end of the first rod is enlarged in diameter to some length, just to compensate the loss of material due to rectangular hole made in it to accommodate a cotter. A collar is provided at the end of the enlarged end of the spigot. The one end of the second rod is formed into a socket or box having an appropriate inner diameter to fit the spigot along with a collar, for a very simple construction socket can be considered as a hollow pipe having one side solid and the other hollow, while the spigot is a solid rod, the solid spigot is nearly of the size of the internal radii of the socket, where it can fit. Once they are fit, consider that a rectangular cavity of tapering construction through both the parts, i.e., spigot and socket. This cavity or slot is kept slightly out

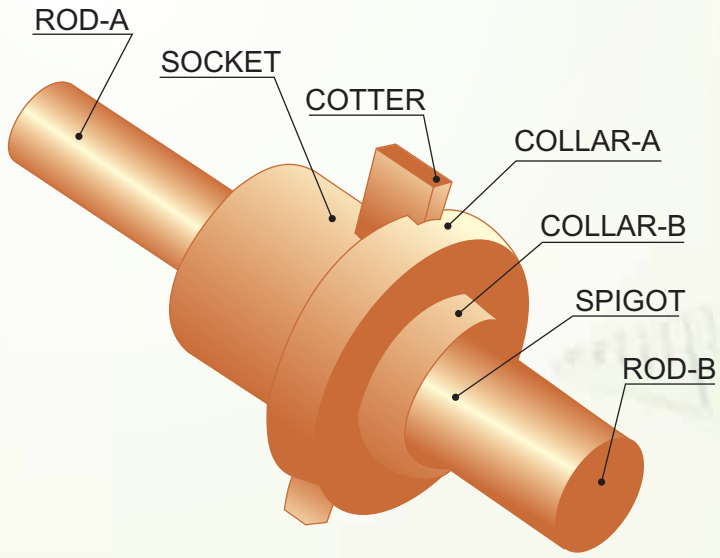

SOCKET AND SPIGOT JOINT

Fig 4.11

of alignment so that driving in of the cotter tends to pull the slots in a line, thus making the joint perfectly tight and rigid. A clearance of 2 to 3 mm is made in these joints for the proper functioning of the cotter.

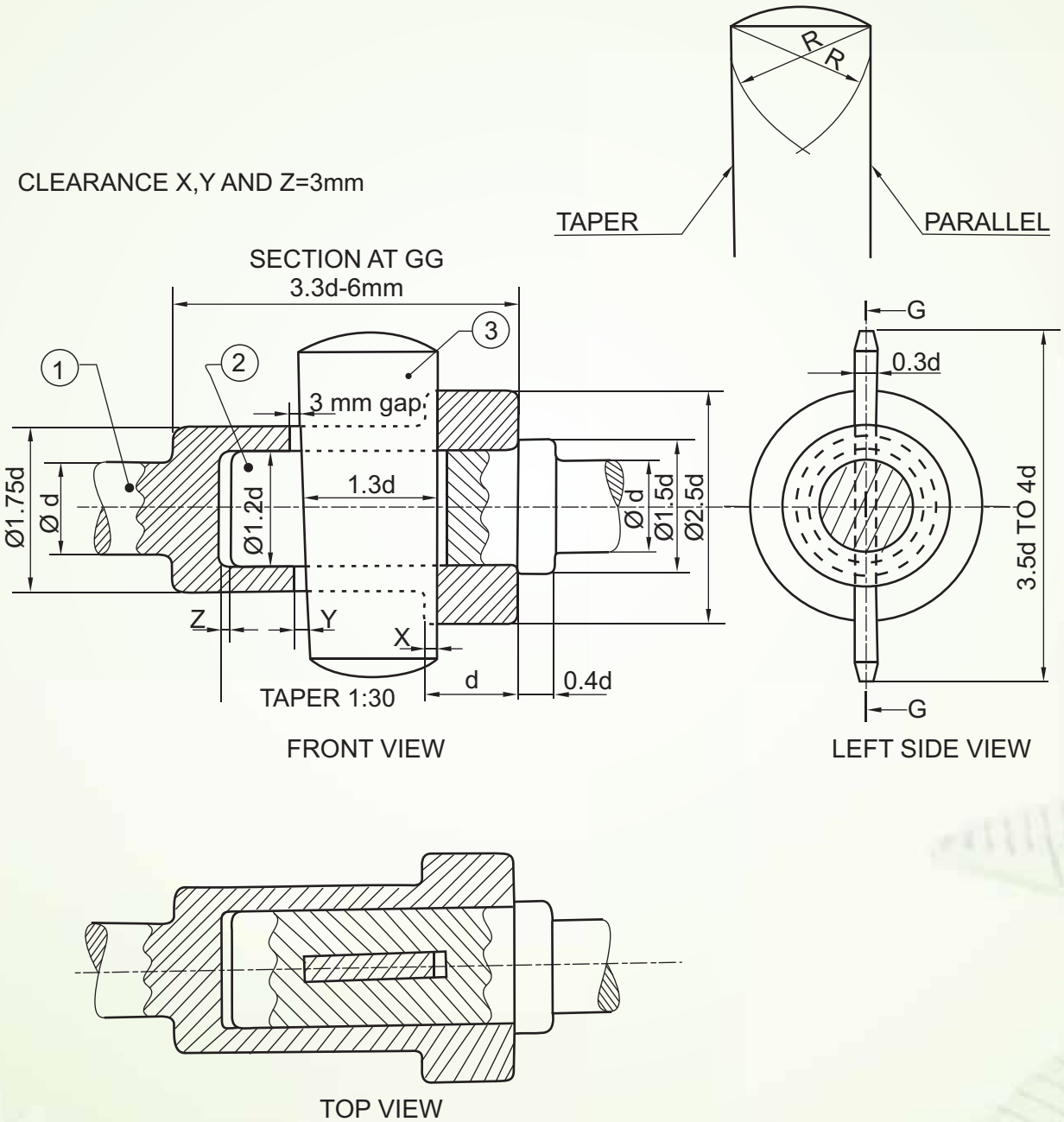

SOCKET AND SPIGOT JOINT
Fig 4.12

Question: The details of a socket and spigot joint are shown in fig 4.13. Assemble these parts correctly and then draw its following views to scale full size.

(a) Front view upper half in section.

(b) Side view, as viewed from right.

Print heading and scale used. Draw projection symbol. Give six important dimensions

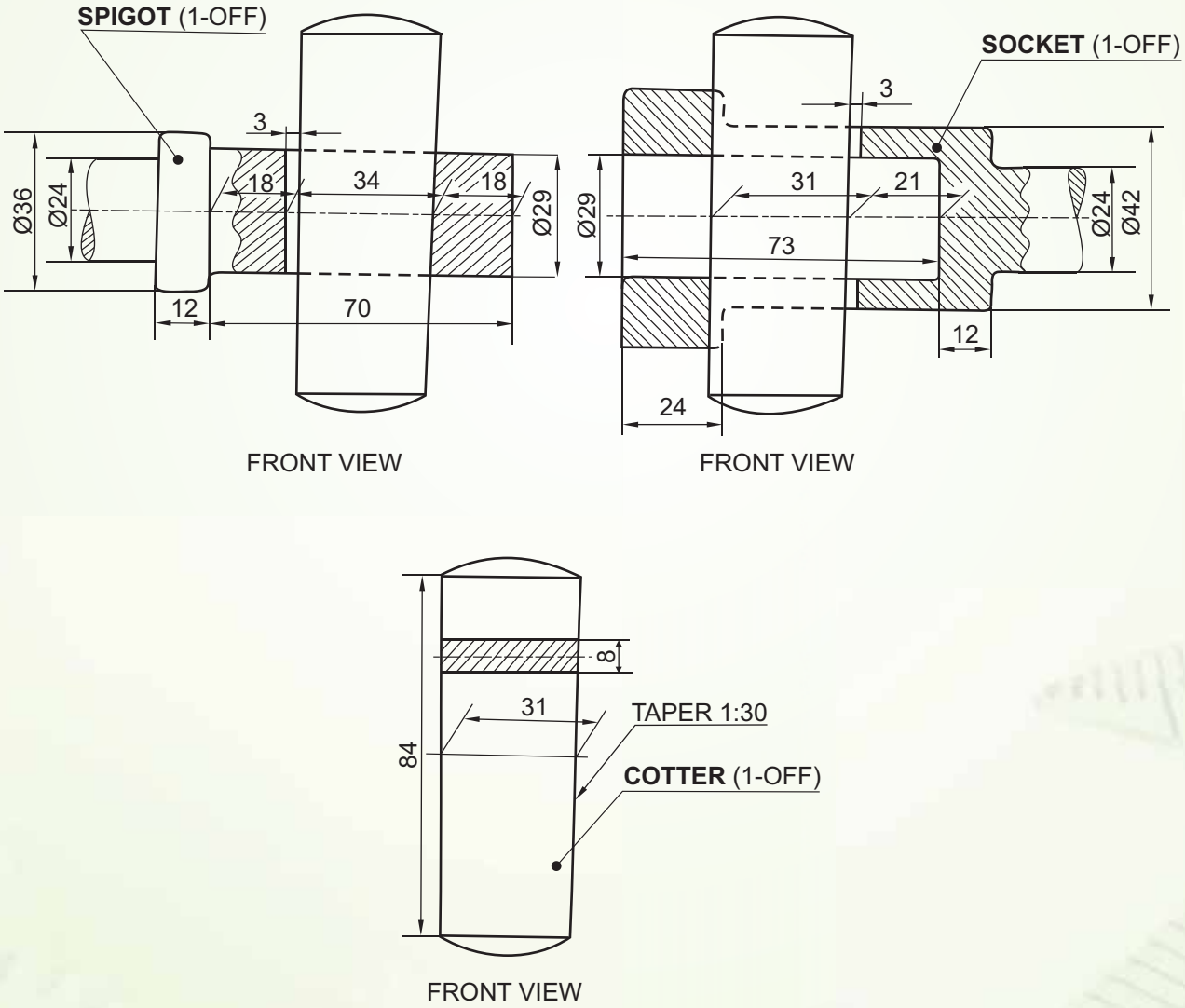

DETAILS OF A SOCKET AND SPIGOT COTTER JOINT

Fig 4.13

Answer of fig. 4.13

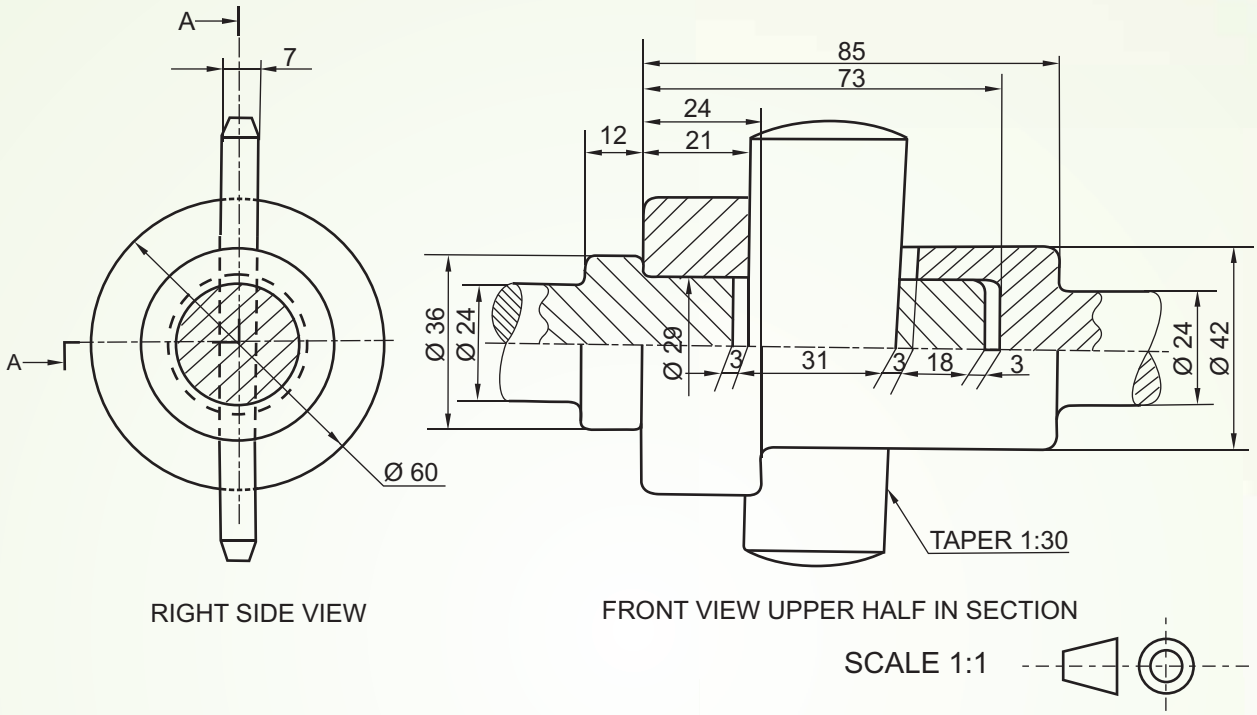

SOCKET AND SPIGOT JOINT

Fig 4.14

Exercise: The three views of a Sleeve and Cotter Joint are given. Disassemble the parts as given below and draw the following views :

(a) SPIGOT

(i) Front view. (ii) Side view from right

(b) SOCKET

(i) Front view (ii) Right side view.

Print headings and scale used. Draw projection symbol. Give 8 important dimensions

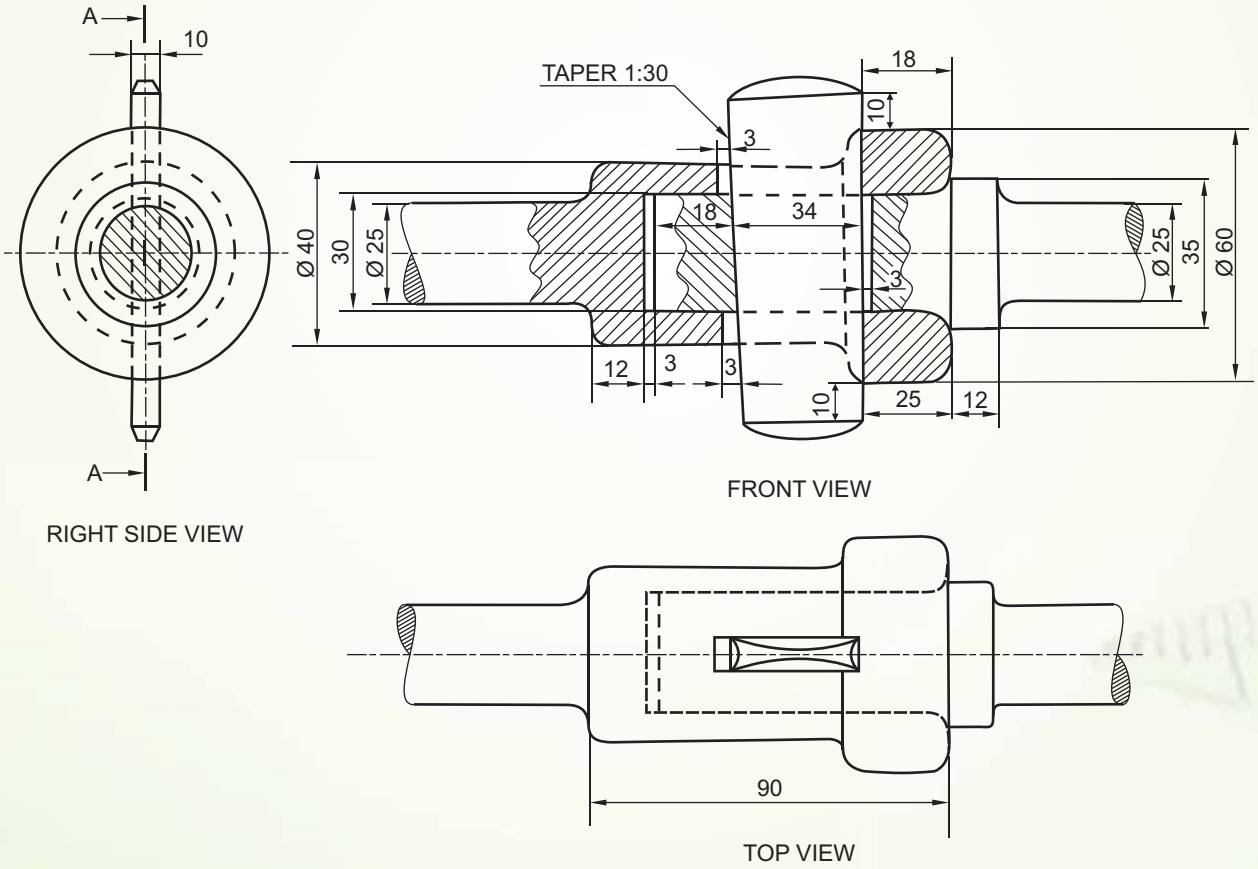

SLEEVE AND COTTER JOINT

Fig 4.15

Exercise: The pictorial views of a Socket and Spigot Joint are given .Disassemble the parts as given below and draw the following views. Refer Fig. 4.16

(a) SPIGOT

(i) Front view lower half in section (ii) Side view from left

(b) SOCKET

(i) Front view upper half in section (ii) Left side view.

(c) COTTER

(i) Front View (ii) Top View

Print headings of the above and scale used. Draw projection symbol. Give 8 important dimensions.

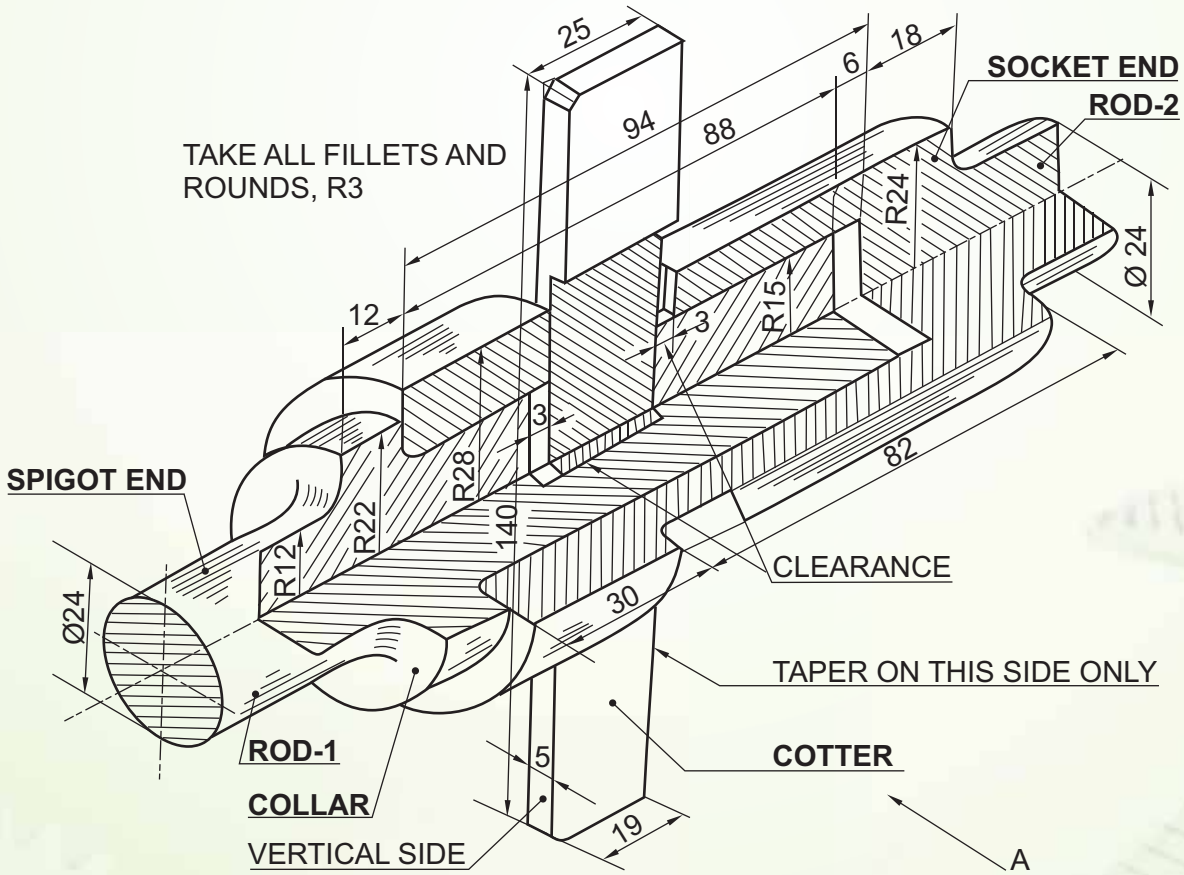

SPIGOT AND SOCKET JOINT

FIG : 4.16

KNUCKLE JOINT OR PIN JOINT

A knuckle joint is generally used to connect rods not positioned in a straight line and subjected to axial tensile load. This joint is not rigid. Sometimes, if it is required to be used to support compressive loading, a guide may be provided to constrain the motion of two fastened components (rods). In this joint the end of one rod is forged to form an eye while the other is made in the form of a fork having double eyes and this is called as eye end and fork end respectively. Eye end is inserted in fork end and a cylindrical pin is inserted through common holes in them. The cylindrical pin is kept in position by a round collar through which a transverse taper pin is inserted. The rods are quite free to rotate about the cylindrical pin. The end of the rods is made rectangular to some distance for firm grip and then these are made into a hexagonal or octagonal in shape (for an easy adjustment with the help of a spanner or a wrench), before it is forged into eye and fork shapes. This type of joint is widely used in practice to connect rods, which, for various reasons, cannot be fitted with a rigid joint. It is commonly used when a reciprocating motion is to be converted into a rotary motion or vice-versa. This joint is used for connecting D-slide valve, and eccentric rod of a steam engine, air brake of locomotives and many kinds of levers and rod connections, tie bars of trusses, links of suspension chains and many other links. The knuckle joint is also used for fastening more than two rods intersecting at a single points.

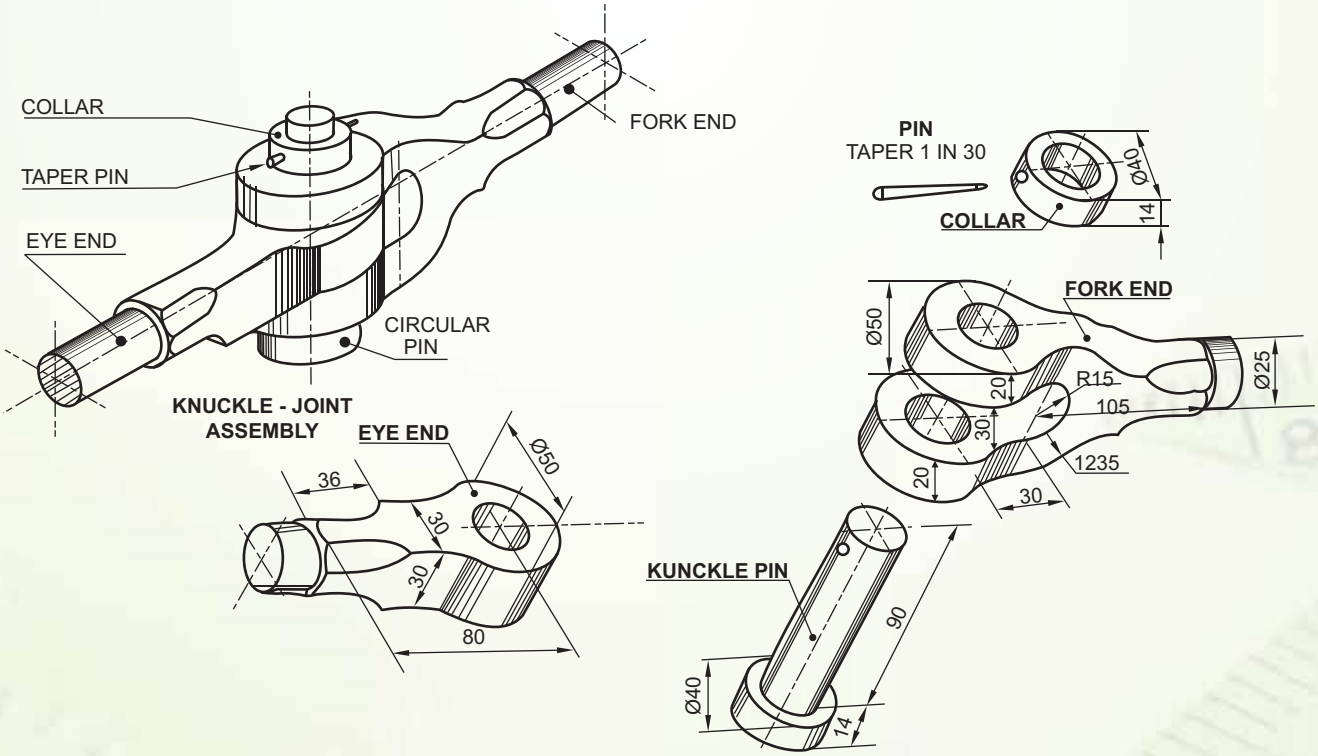

KNUCKLE JOINT OR PIN JOINT PARTS

Fig: 4.17

Dimensions of a Knuckle Joint or Pin Joint in terms of the diameter(d) of the rods to be connected.

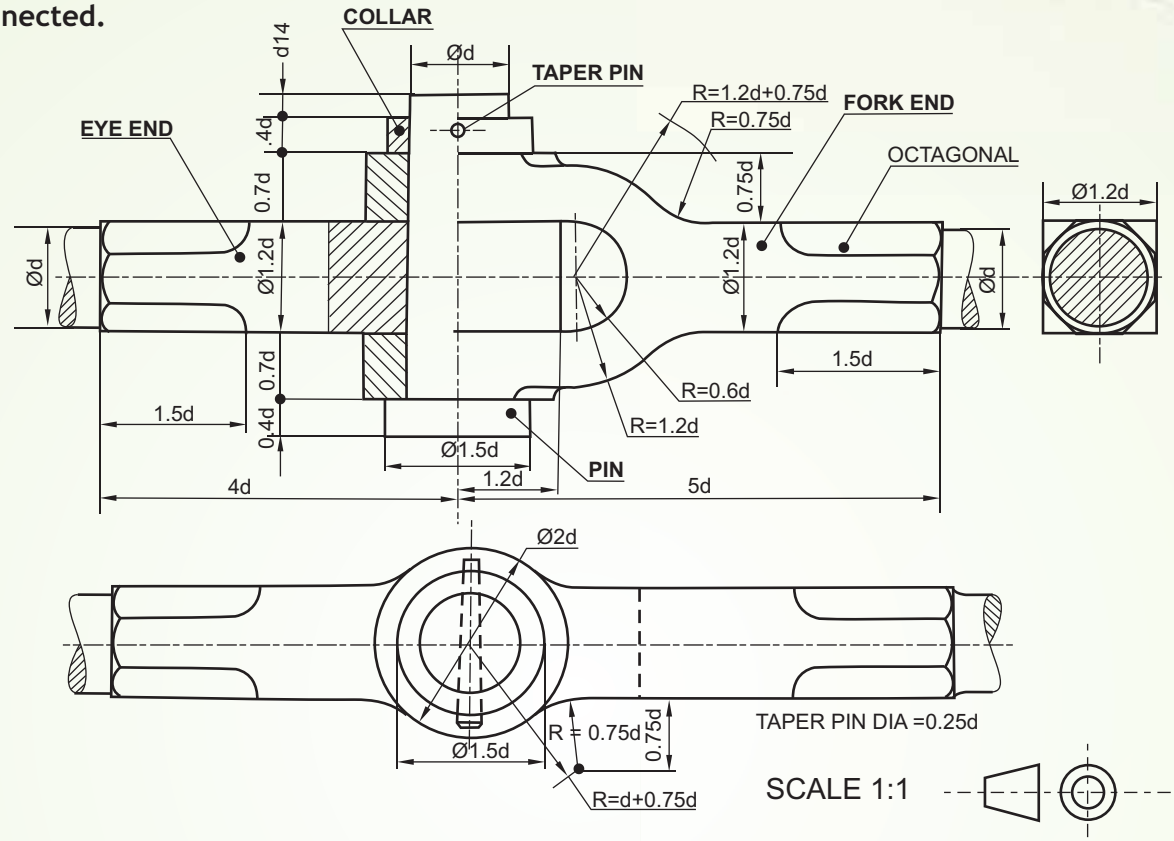

KNUCKLE JOINT

Fig: 4.18

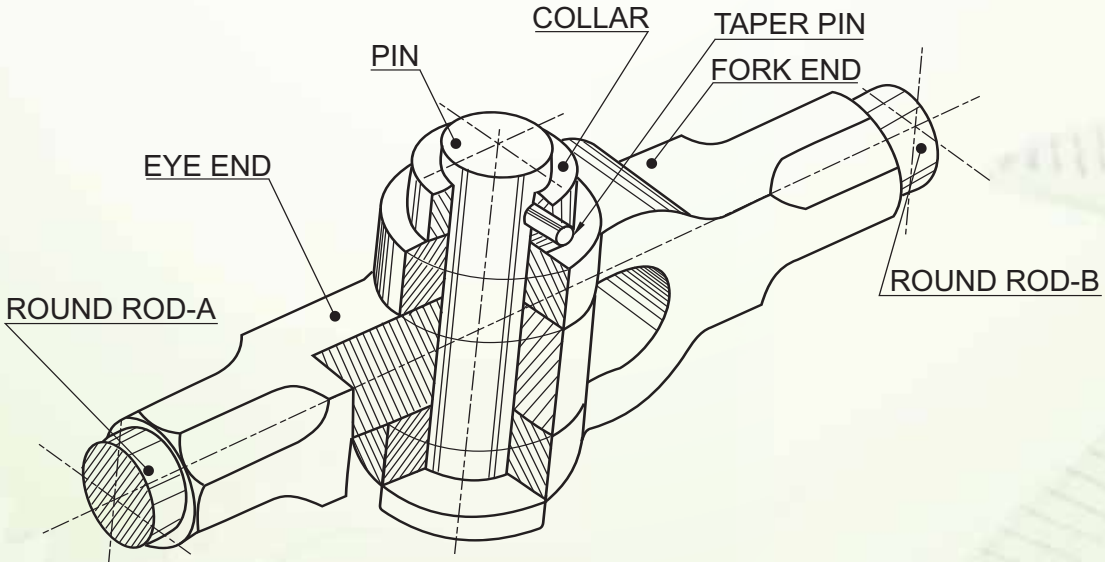

SECTIONAL ASSEMBLY OF A KNUCKLE JOINT

Fig: 4.19

Question: fig 4.19(a) shows the parts of a KUNCKLE JOINT. Assemble the parts correctly and then draw the front view, showing upper half in section using the scale 1:1

Print title and scale used. Give 6 important dimensions.

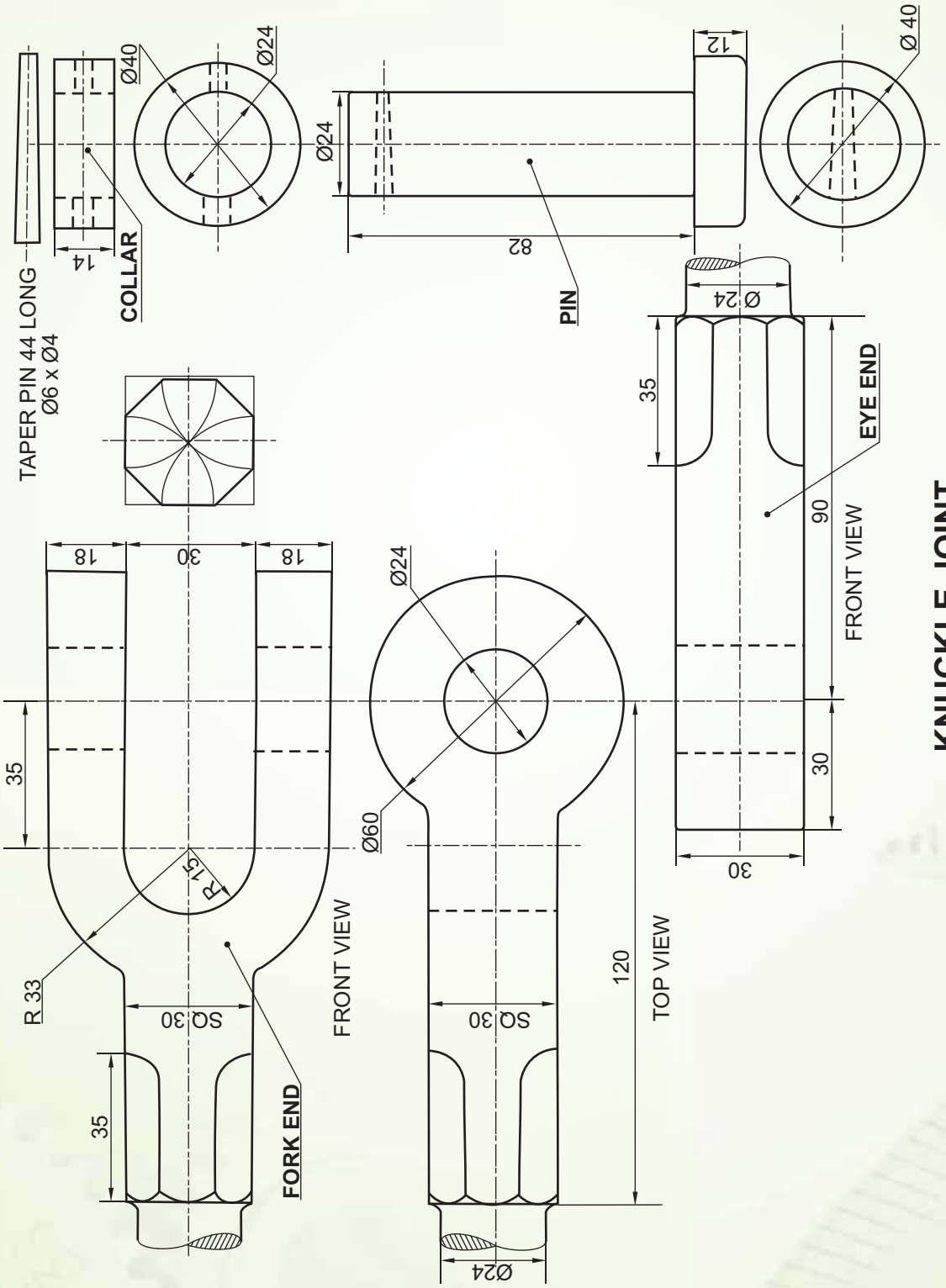

KNUCKLE JOINT
Fig: 4.19(a)

Answer of fig 4.19 (a)

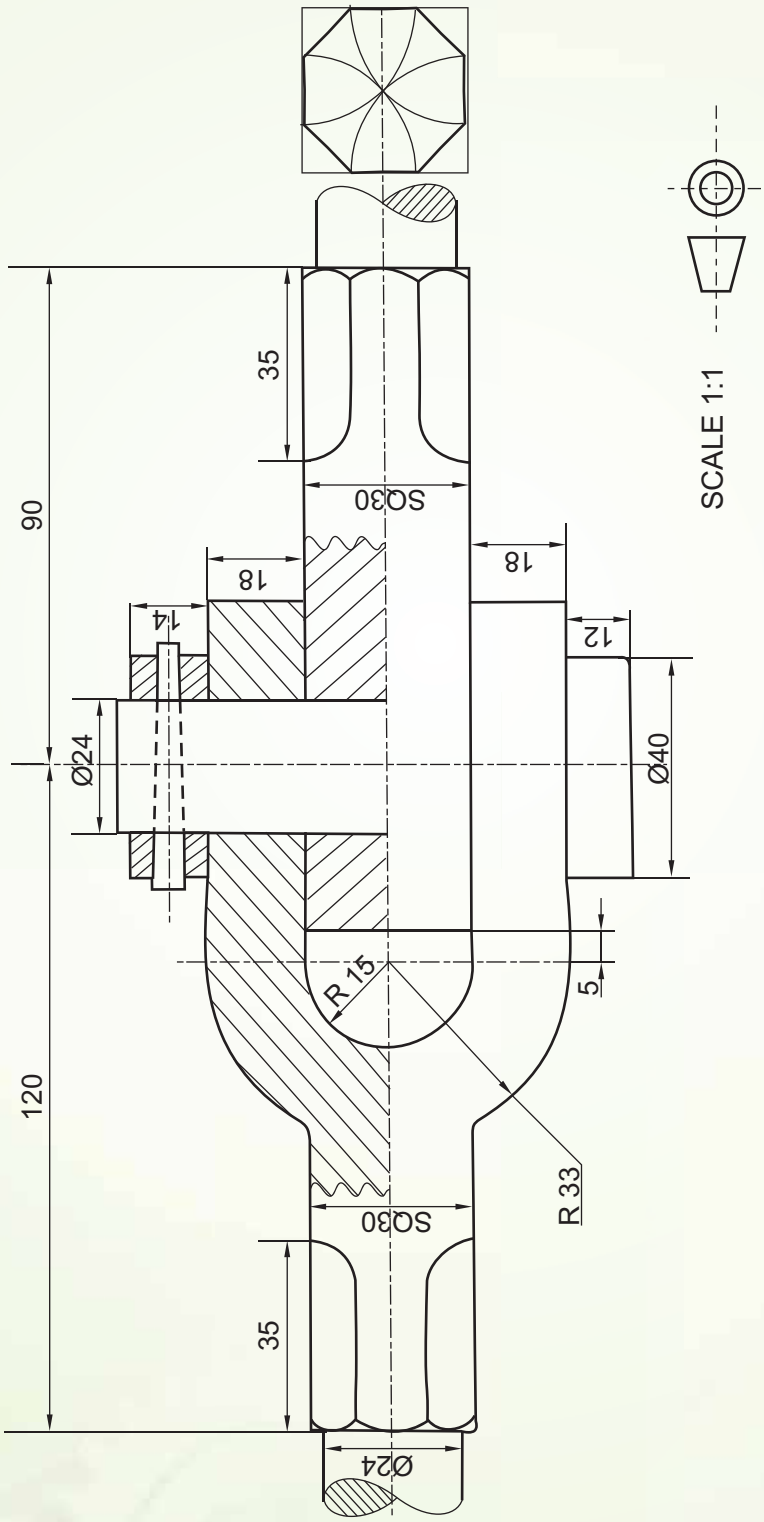

KNUCKLE JOINT

Fig: 4.20

Question: The figure 4.21 shows the parts of a Knuckle joint. Assemble these parts correctly and then draw the Front view, bottom half in section, to a scale full size.

Print title and scale used. Give six important dimensions.

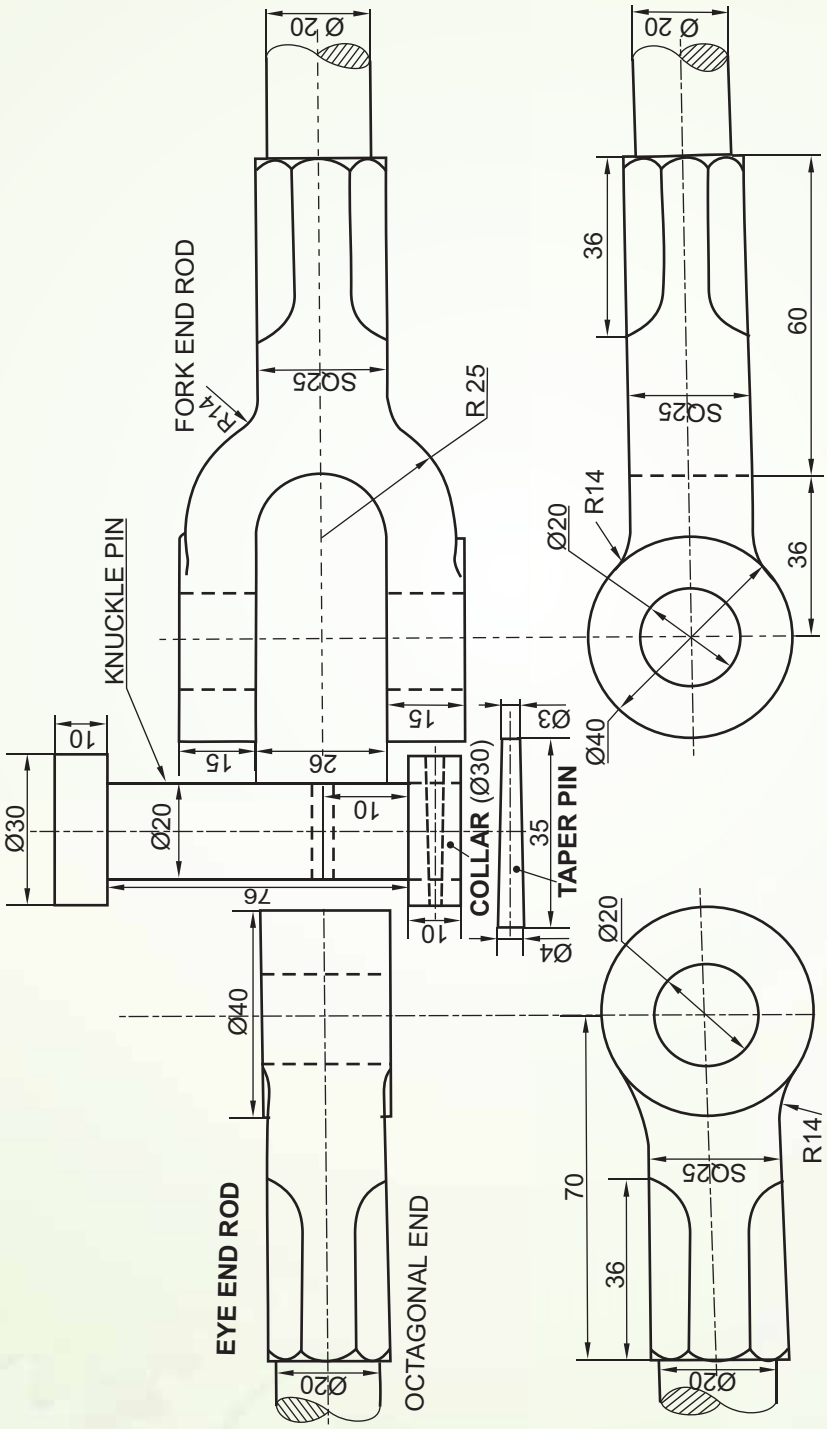

KNUCKLE-JOINT

Fig: 4.21

Answer of fig 4.21

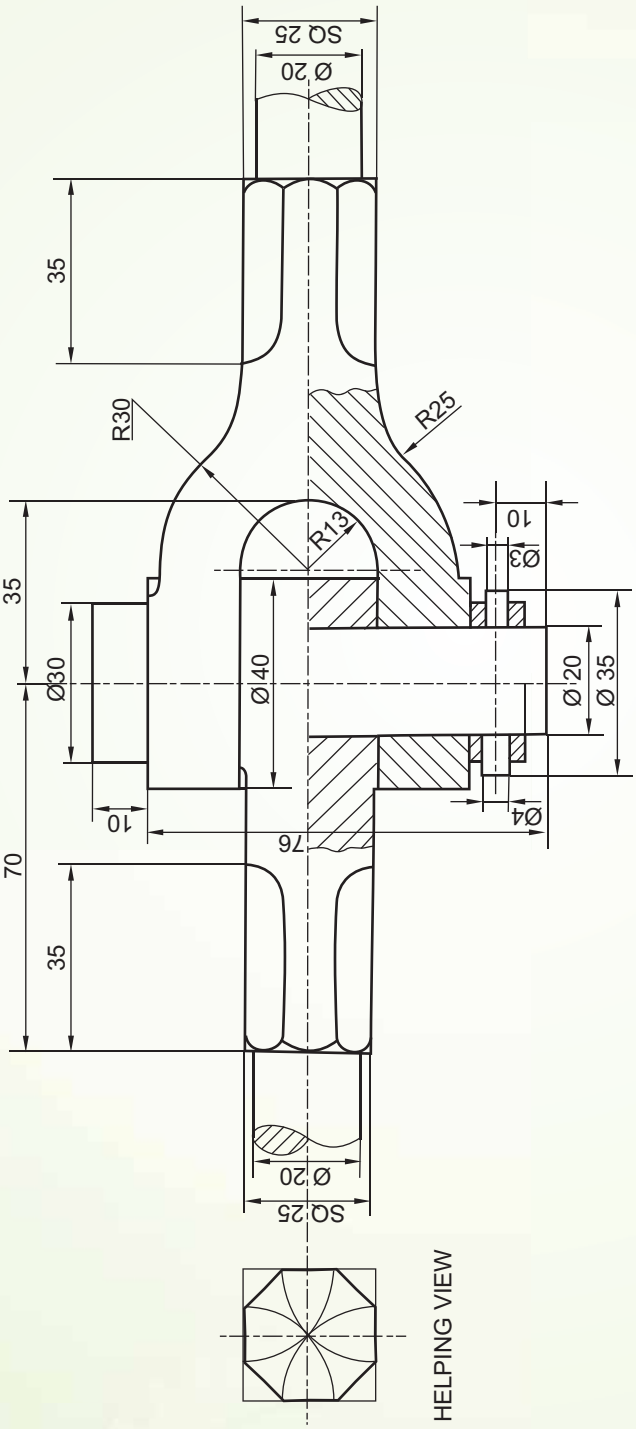

FRONT VIEW (LOWER HALF IN SECTION)

SCALE 1:1

KNUCKLE JOINT

Fig: 4.22

Exercises: The three views of a Knuckle Joint are given in (fig.4.23). Disassemble and draw the parts as given below.

(a) FORK END

(i) Front view upper half in section

(b) EYE END

(i) Front view lower half in section

(c) CIRCULAR PIN

(i) FRONT VIEW

Print headings of the above views and scale used. Draw projection symbol. Give six important dimensions

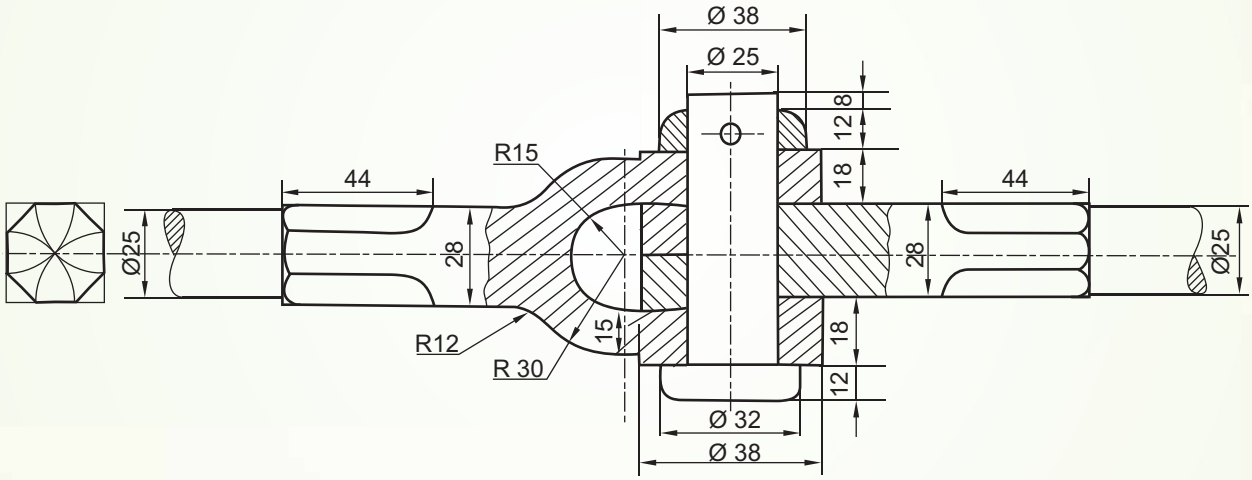

FRONT VIEW FULL IN SECTION

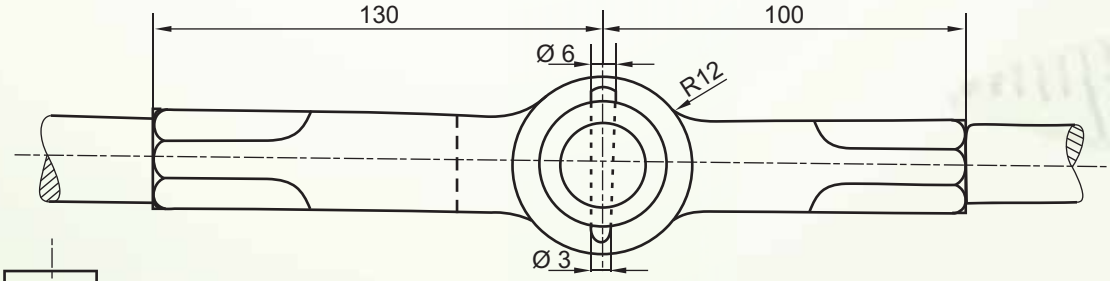

TOP VIEW

SCALE 1:1

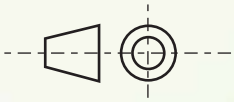

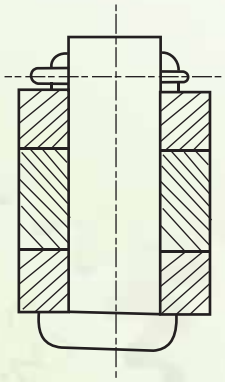

ASSEMBLY OF KNUCKLE JOINT

Fig 4.23

GIB AND COTTER JOINT

This joint is used to join two rods of square or rectangular in cross section. The end of one rod is forged in the from of a fork or strap. The height of the other rod is increased for compensating the loss of material in making the slot for cotter. The Gib is made up of mild steel and has the same thickness as that of the cotter. the Gib has projections at the top and bottom ends which act like hooks. While connecting two rods the Gib is inserted first and pushed towards the end of the fork and then the cotter is hammered over. The tapering sides of the Gib and the cotter mate with each other, while their outer sides are parallel to each and perpendicular to the common axis of the rods. Hence, when a Gib is used with a cotter, the opposite faces of the slots in the rods are parallel to each other. The Gib acts like a counter part of the socket/strap. The Gib increases the tearing area of the cotter and prevents slackening of the joint besides holding the jaws of the strap or fork from opening wide when the cotter is inserted. The use of Gib and Cotter enables the parallel holes to be used. When Gib is used the taper is provided in the Gib. This joint is useful to fasten connecting rod of a steam engine or marine engine.

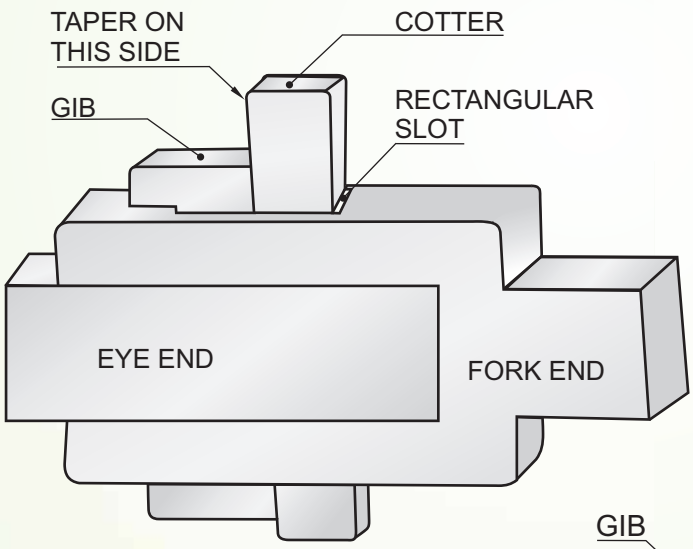

Fig. 4.24

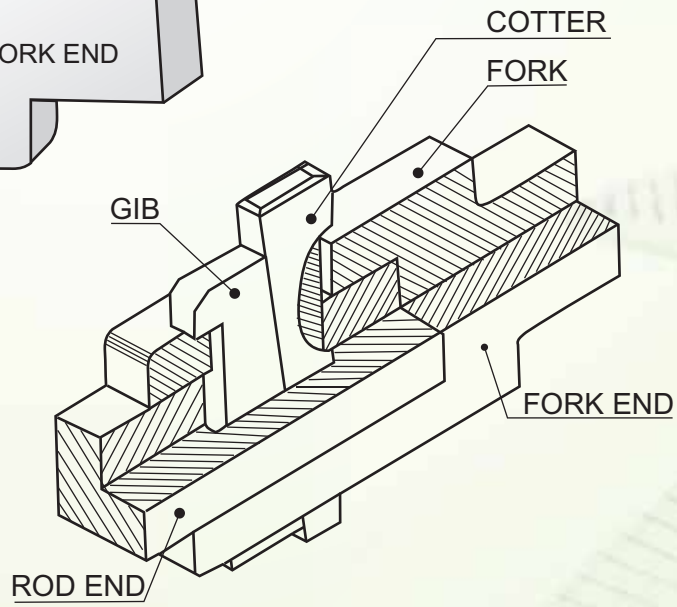

SECTIONAL VIEW OF GIB AND COTTER JOINT

Fig. 4.25

Dimensions of a Gib and Cotter Joint in terms of the side (s) of the rods to be connected.

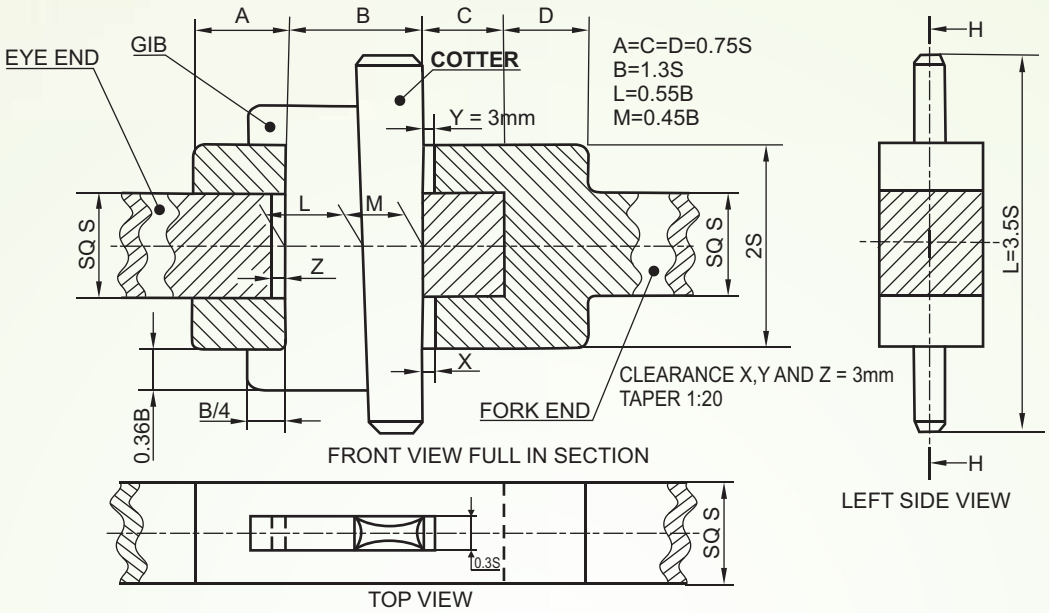

GIB AND COTTER JOINT FOR SQUARE RODS

Fig. 4.26

Question: The figure 4.27 shows the exploded pictorial View of a Gib and Cotter Joint. Assemble these parts correctly and then draw the following views to scale 1:1.

(a) Front View, full in section

(b) Right side view

(c) Top view.

Print title and scale used. Give six important dimensions.

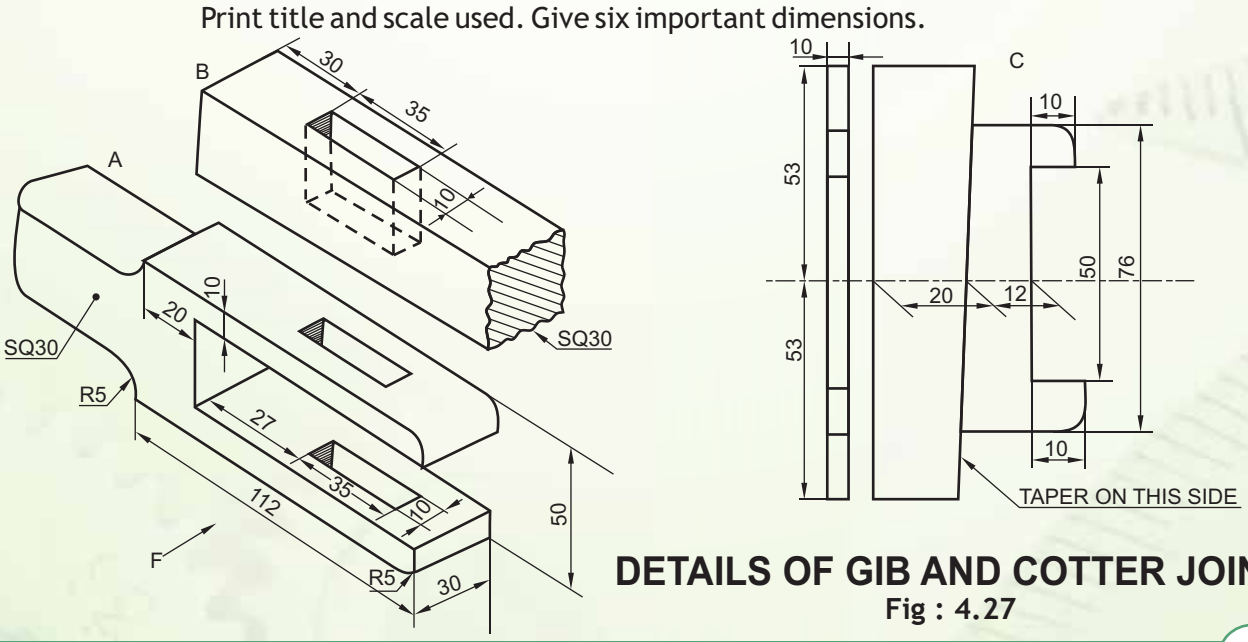

DETAILS OF GIB AND COTTER JOINT

Fig : 4.27

Answer: of fig (4.27)

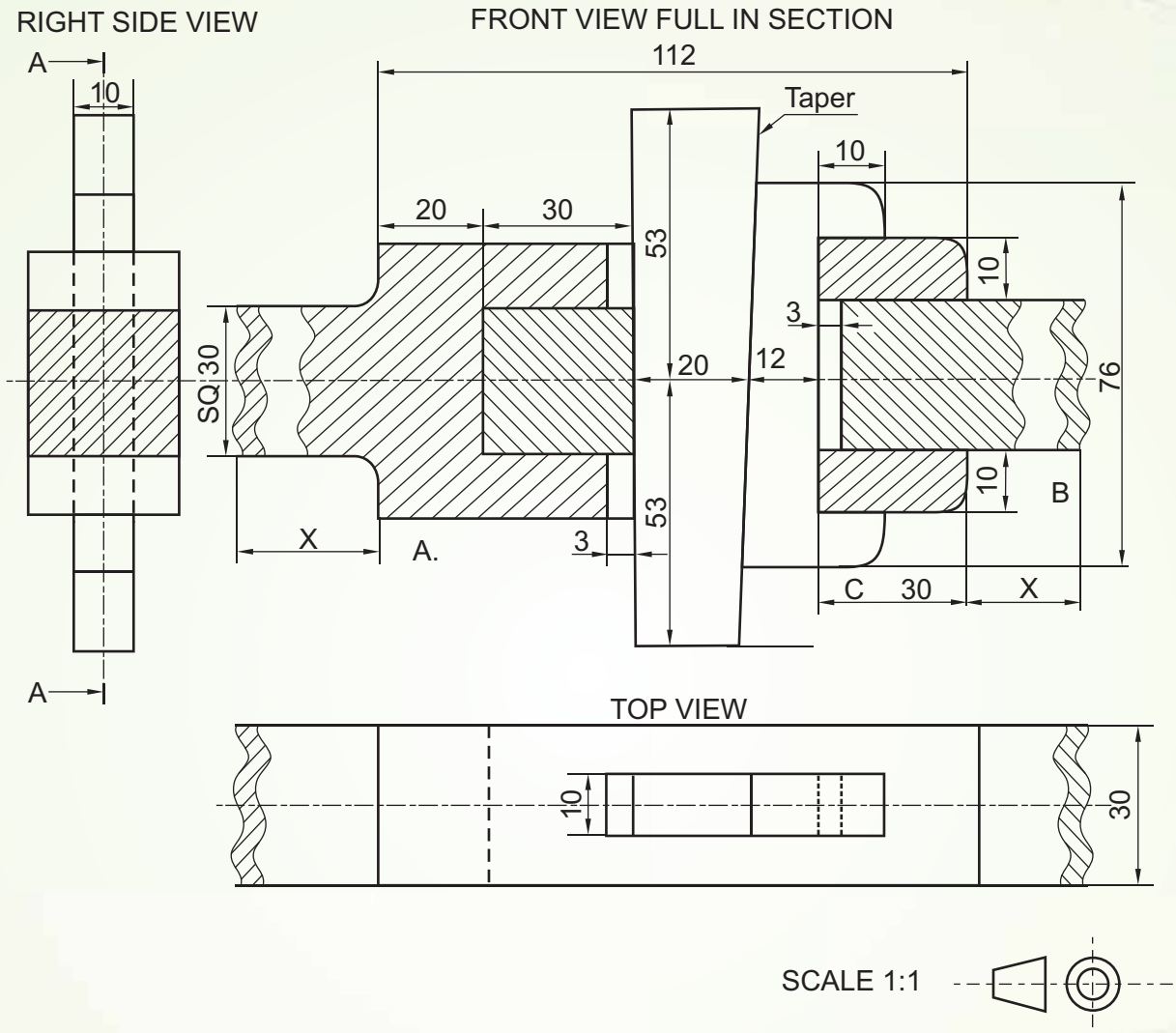

ASSEMBLY OF A GIB AND COTTER JOINT

Fig. 4.28

Question: The figure 4.29 shows the detail drawings of different parts of a Gib and Cotter Joint for joining two square rods. Assemble all the parts correctly and draw the following views to scale 1:1

(a) Front view, upper half in section.

(b) Side view, viewing from the left hand side.

(c) Print title, scale used and draw the projection symbol. Give '6' important dimensions.

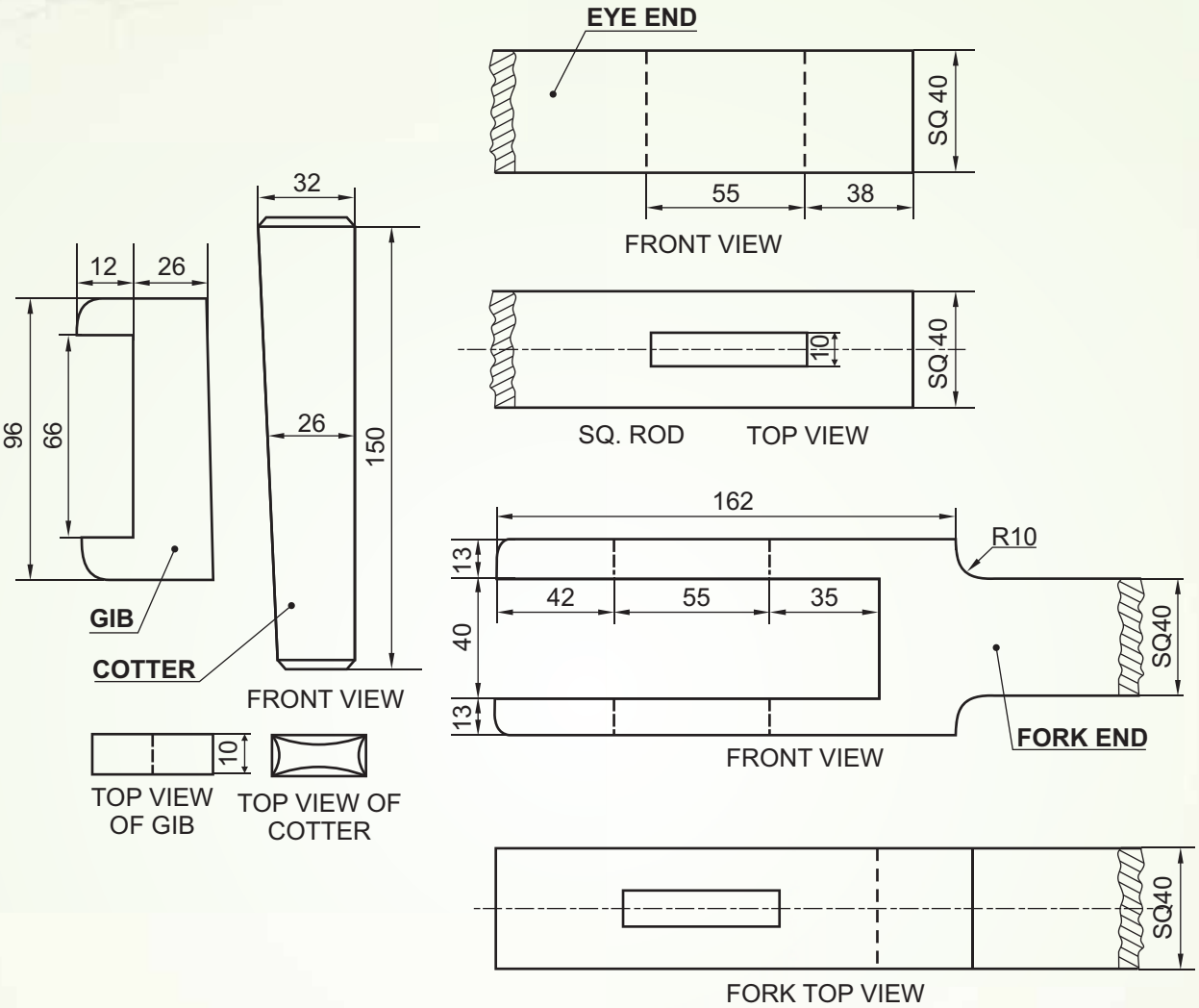

DETAILS OF A GIB AND COTTER JOINT

FIG: 4.29

Answer of fig 4.29

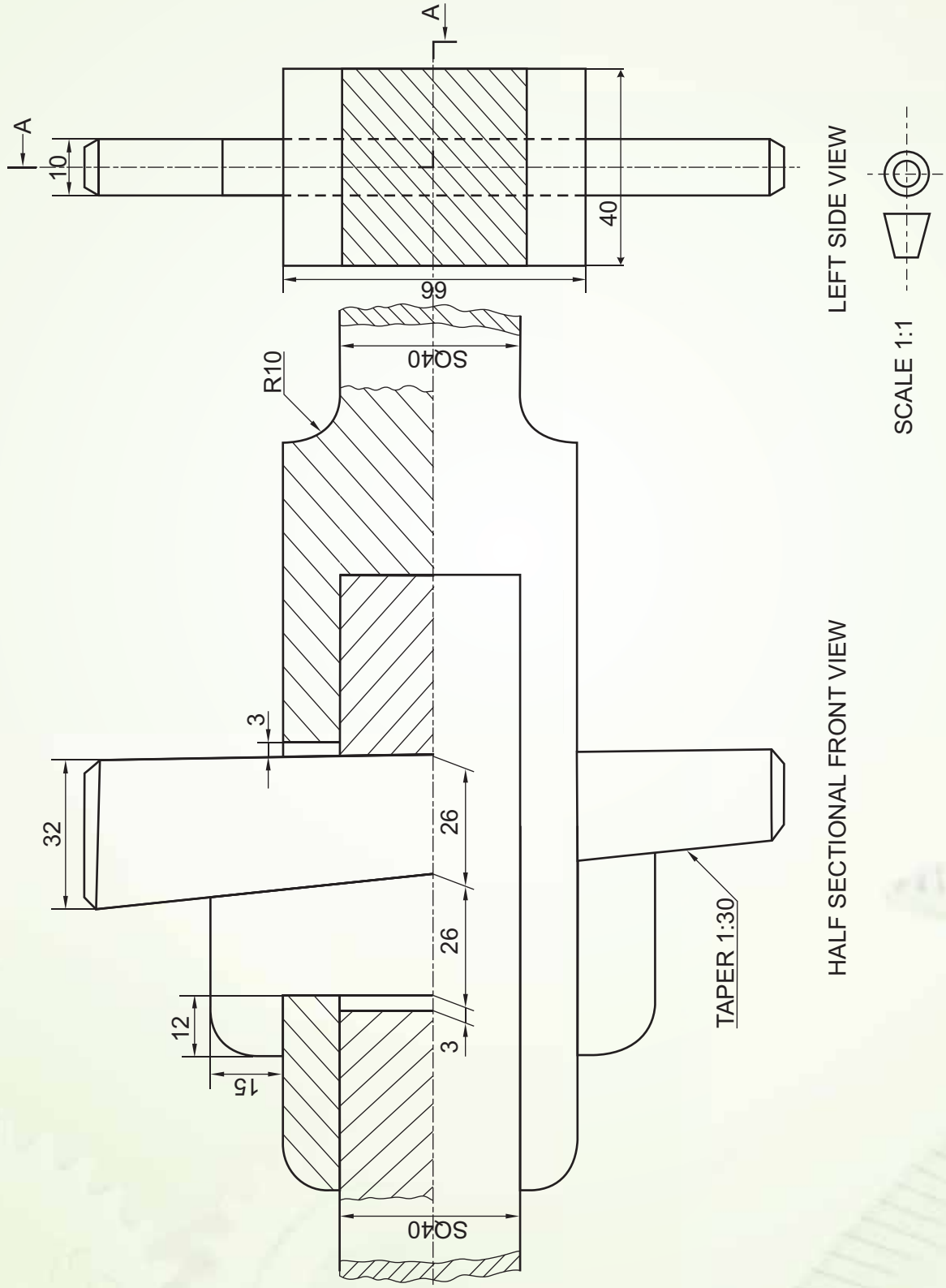

ASSEMBLY OF A GIB AND COTTER

FIG: 4.30

Exercise: The two views of a Gib and Cotter Joint are given. Disassemble the parts as give below: Fig : 4.31

(a) FORK END

(i) Front view upper half in section and top view without section.

(b) EYE END

(i) Front lower half in section and top view.

(c) GIB

(i) Front view and top view

(d) COTTER

(i) Front and top view.

Print headings of the above views and scale used. Draw projection symbol. Give six important dimensions.

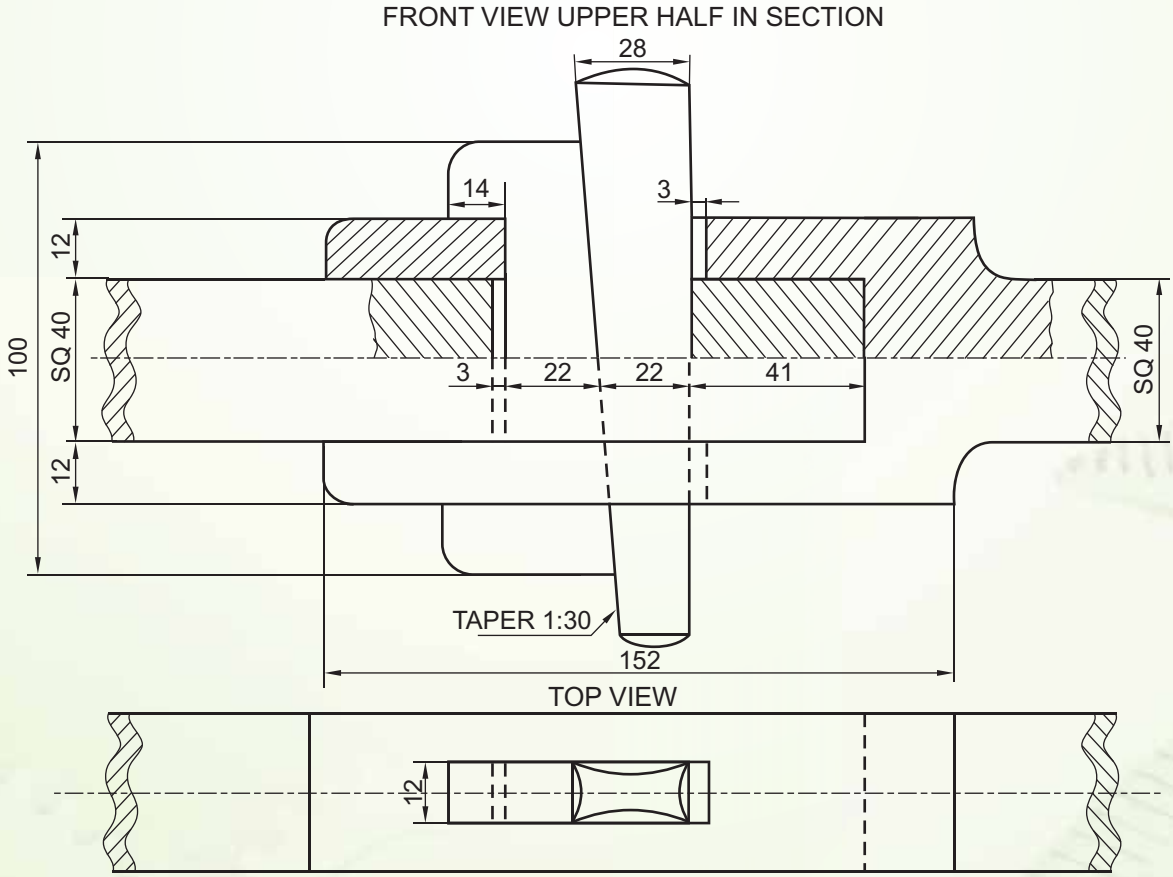

GIB AND COTTER JOINT

Fig 4.31

Exercises

Q.1. What is cotter?

Q.2. What are dimensions of a cotter in terms of the diameter of the shafts to be joined?

Q.3. Why clearance is necessary in a cotter joint?

Q.4. What do you understand by the self locking of the cotter?

Q.5. Why a Gib is used along with a cotter in a Gib and cotter joint?

Q.6. Where knuckle joint is used?

CHAPTER 5

TIE-ROD AND PIPE JOINTS

Machines use various parts which are joined in several ways for the machine to function as whole. We have learnt about some devices like fasteners (temporary & permanent) and some simple joints to join two rods in the previous chapters. Let us now learn some more miscellaneous joints which are commonly used, viz.

(a) TIE-ROD JOINT / TURNBUCKLE

(b) FLANGED PIPE JOINT

5.1 TIE-ROD JOINT

In our day to day life, we may come across rods/machine parts which are subjected to push and pull and this joints need to be tightened or loosened as in the case of wires of electric poles, cables, a sailboat's standing, rigging wires or even in boxing rings.

(a) In cables/ guy wires

(b) In electric poles.

(c) In boxing rings

USE OF TURNBUCKLE

Fig.5.1

In such cases, an adjustable joint known as 'turnbuckle' is used. It serves as a joining device between the ropes and the posts or rods.

COMMERCIAL TYPE TURNBUCKLE.

Fig 5.2

5.1.1 FEATURES:

The 'turnbuckle' consists of an elongated metal tube (body) which is cylindrical in shape and has tapered ends. Its central portion has a slot to aid tightening and loosening of rods by tomy bar. Each tapered end of the body has threaded holes with opposite internal screw threads, i.e. Right hand (RH) threads at one end and left-hand (LH) threads at the other, as shown in Fig 5.3 (a)

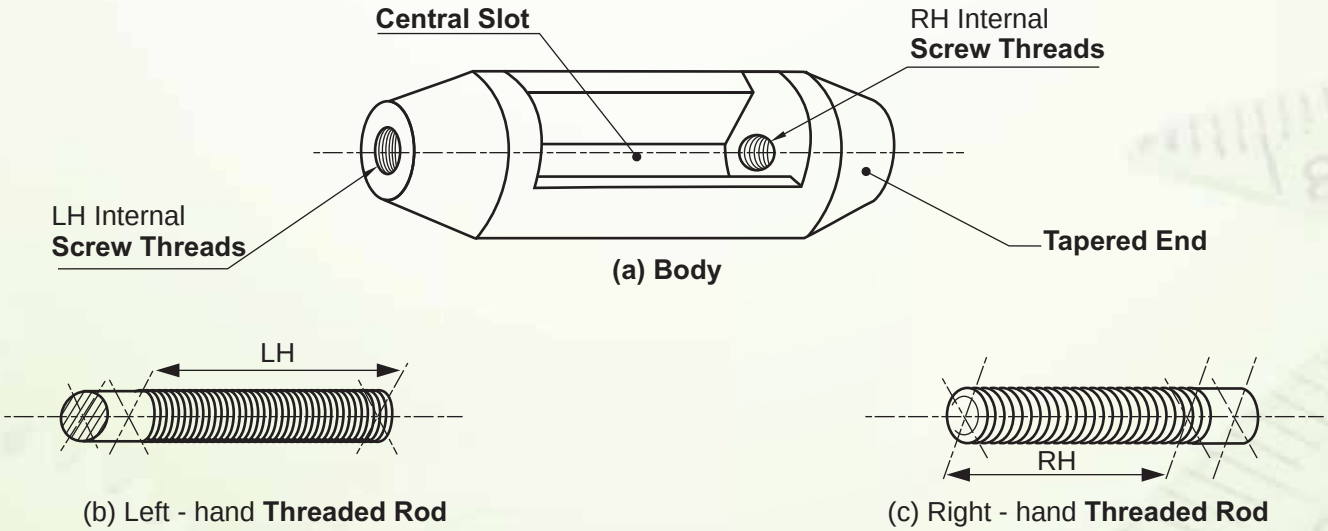

DETAILS OF A TURNBUCKLE

Fig 5.3

(We have discussed about the conventional representation of screw threads (RH & LH) in the previous chapter, refer section 3).

Even the two rods / ring bolts have threads of opposite hand, which are screwed in and out of the body simultaneously to adjust the pull/ push (tension) or length, without twisting the wires or attached cables.

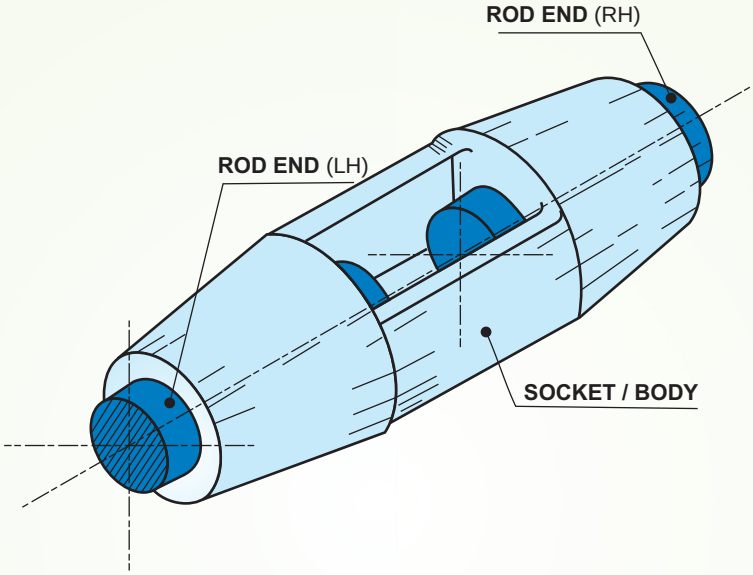

ASSEMBLY OF A TURNBUCKLE (PICTORIAL VIEW)
Fig 5.4

5.1.2 Orthographic views

Now, let us understand their orthographic views, with the help of an example and move on to assembly of different parts of the `Turnbuckle' and then drawing of the required sectional views.

Example 1 The fig 5.5 shows details of the parts of a Turnbuckle. Assemble these parts correctly and then draw its following views to scale 1:1, inserting 50mm threaded portion of each rod inside the body of Turnbuckle.

(a) Front view, upper half in section.

(b) Top view.

(c) Side view as viewed from left.

Write heading and scale used. Draw projection symbol. Give important dimensions.

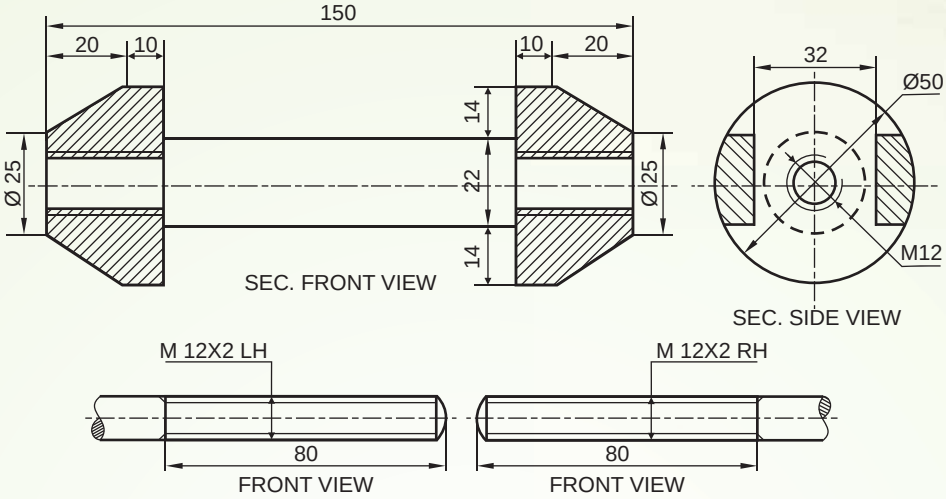

DETAILS OF A TURNBUCKLE

Fig 5.5

Solutions: The above fig 5.5 shows orthographic views of different parts of a `Turnbuckle". Let us assemble them correctly to obtain/ draw the required views.

The internal diameter of threaded holes of the body and diameter of the rods are same, so the LH (Left-hand) Threaded rod will be fitted from the left- side of the body and similarly the RH Threaded rod from the right side.

Point to remember :

(1) Only 50mm of the threaded portion of the rods will be inside the turnbuckle, the remaining 30mm portion will be shown outside the body as can be seen in the Fig. 5.6 below.

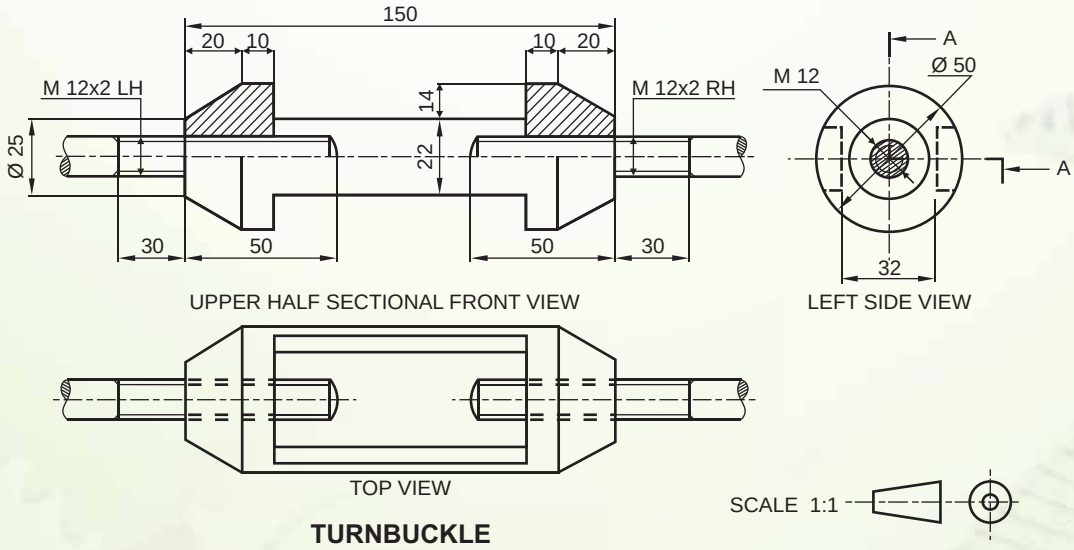

TURNBUCKLE

ASSEMBLY OF A TURNBUCKLE (ORTHOGRAPHIC VIEWS)

Fig 5.6

(2) It can also be noticed that the width of the edges of the slots can be obtained from the side view.

(3) In the sectional front view, the rods need not be locally sectioned as no intricate inner details are present, as in the previous chapter.

Let us consider another example, and draw the orthographic views of the assembled parts.

Example 2: The fig 5.7 shows the details of the parts of a Turnbuckle. Assemble these parts correctly, and then draw its following views to scale 1:1, inserting 60mm threaded portion of each rod inside the body of the Turnbuckle.

(a) Front view, lower half in section.

(b) Side- view as viewed from the right.

Print title and scale used. Draw projection symbol. Give six important dimensions.

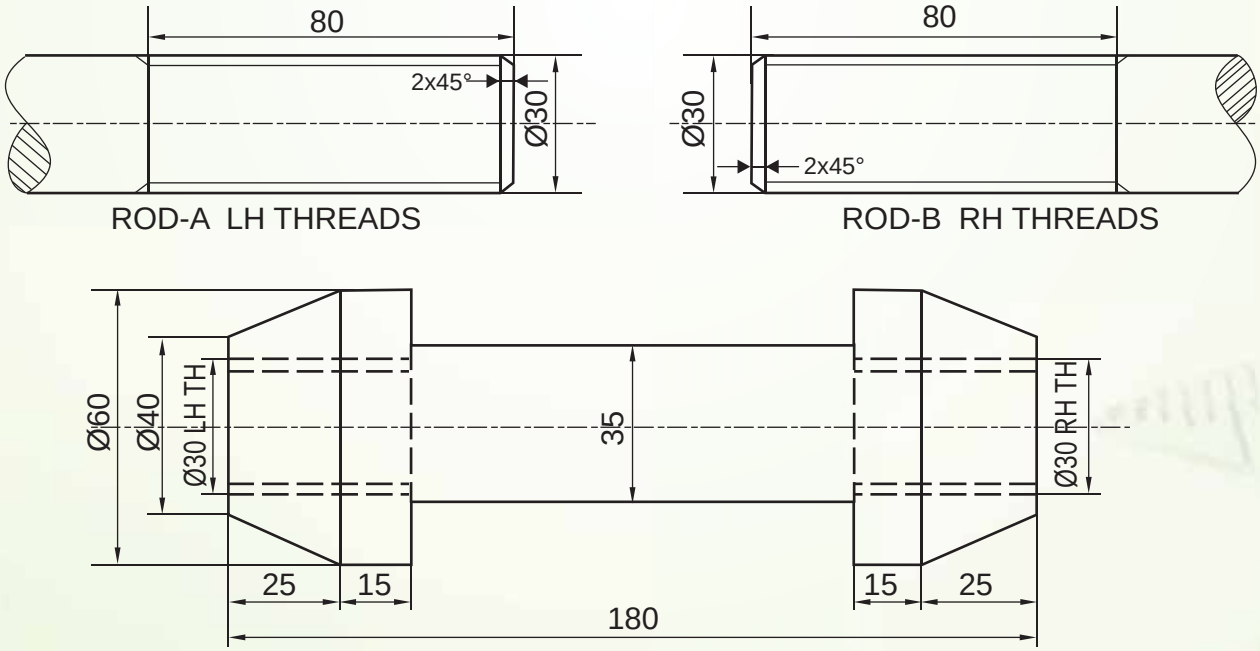

DETAILS OF A TURNBUCKLE

Fig 5.7

Solution: In the fig 5.7 given, orthographic views of the parts of a Turnbuckle" are shown. Let us assemble them correctly and obtain the orthographic views as shown below in fig 5.8

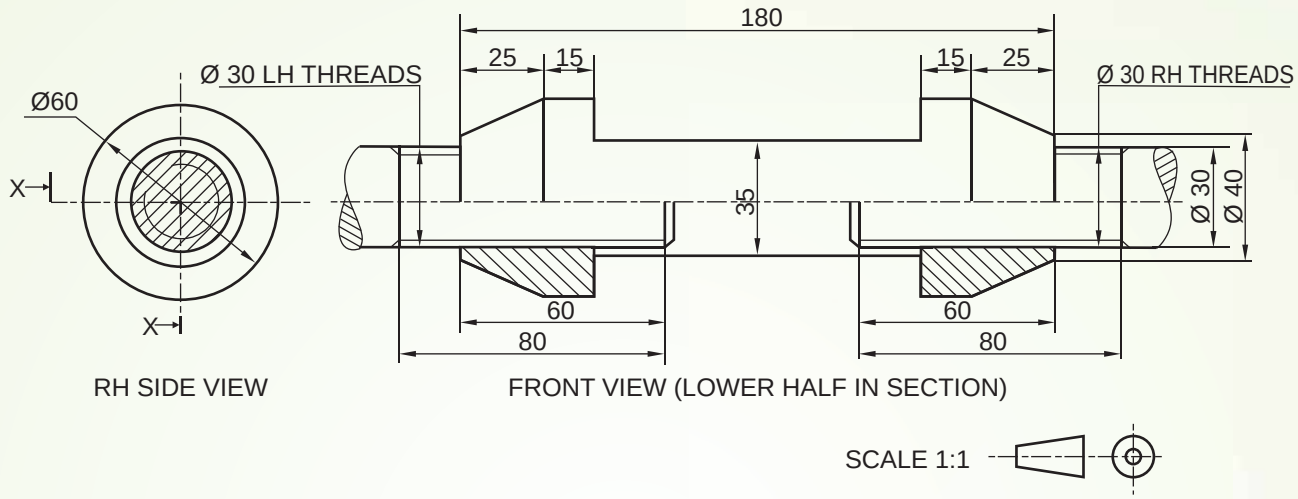

ASSEMBLED ORTHOGRAPHIC VIEWS OF A TURNBUCKLE.

Fig 5.8

Exercise 5.1

1. Figure 5.9 and 5.10 shows the disassembled views of the parts of a Turnbuckle. Assemble the parts correctly, and then draw the following views to scale 1:1, keeping the same position with respect to HP and VP:

   (a) Half sectional elevation, upper half in section.

   (b) Plan.

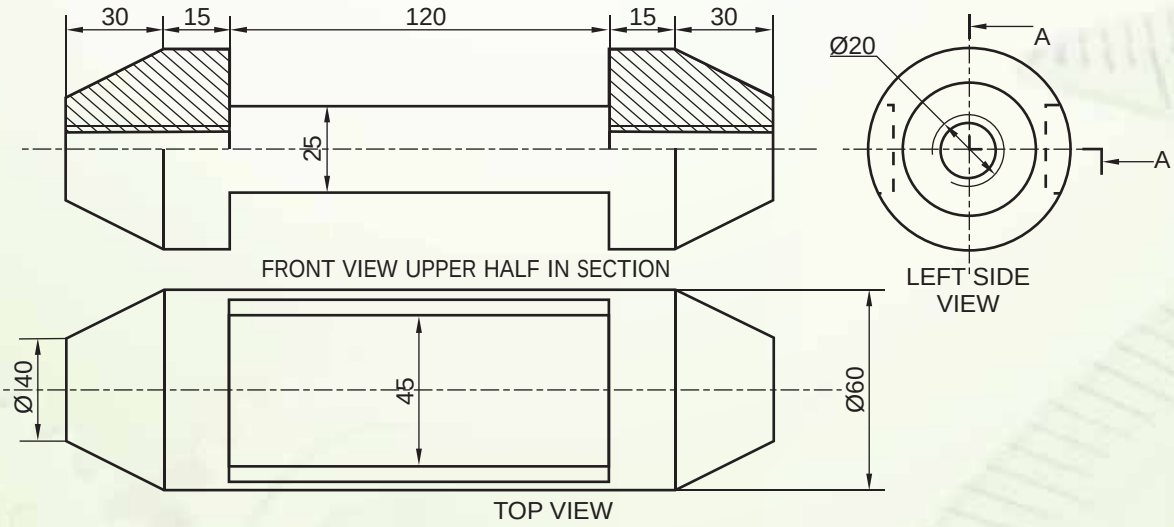

(a) TURNBUCKLE

Fig 5.9

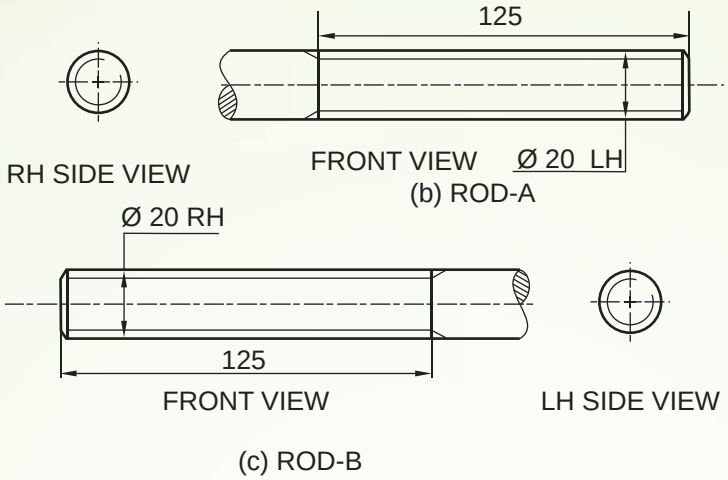

ORTHOGRAPIC VIEWS OF DETAILS OF A TURNBUCKLE

Fig.5.10

Print the title and scale used. Give six important dimensions.

5.2 PIPE-JOINTS

Those long hollow cylinders or 'pipes' are a regular feature, be it the pipes that bring water from treatment plants to your home or the drainage pipes or even the roadside long gas pipe-line.

(a) A GAS PIPELINE

(b) Discharge from a factory

(c) Drinking from a water pipe

USES OF PIPES

Fig 5.11

Since ages, we know pipes have been extensively used as carriers of fluids like water, oil, steam gas, waste, for water supply systems, oil refineries, chemical plants, sewage piping system etc. And these pipes may be made of different materials like cast-iron, steel, wrought iron, plastic or concrete as per the requirement; but they "can't be made of a desired length" for a particular use, due to constraints of manufacturing, transportation, storing and handling difficulties. So pipes of standard length are taken and joined together, depending upon the material and purpose for which it is used.

The most common among them is the 'Cast Iron Flange Joint' which we will discuss in detail.

5.2.1 CAST-IRON FLANGE PIPE JOINT

As the name suggests, this type of joint is used for cast-iron (C.I.) pipes, which are usually of large diameter not less then 50 mm and used mostly for low-pressure applications, such as underground sewer pipes, water and gas lines and drainage in buildings. We can also see this type of joint in the water outlet pipes installed in several schools as a fire safety measure.

(a) Gas Production Plant

(b) Water Pipe

SOME APPLICATIONS OF FLANGE JOINT

Fig. 5.12

5.2.1.1 FEATURES:

In this type of joint, both the hollow cylindrical pipes have a projected circular ring/ flared rim on their ends, which is known as 'flange', as shown in fig 5.13. It serves to hold the pipe in place, give it strength and also attach to another flange. The flanges are made thicker than the pipe-walls for strength. Greater strength may be required when pressure is high; so the thickness of the pipe-walls is increased for short lengths in steps, as indicated in the fig 5.13. We also know pipes carry liquids and gases and they need to be

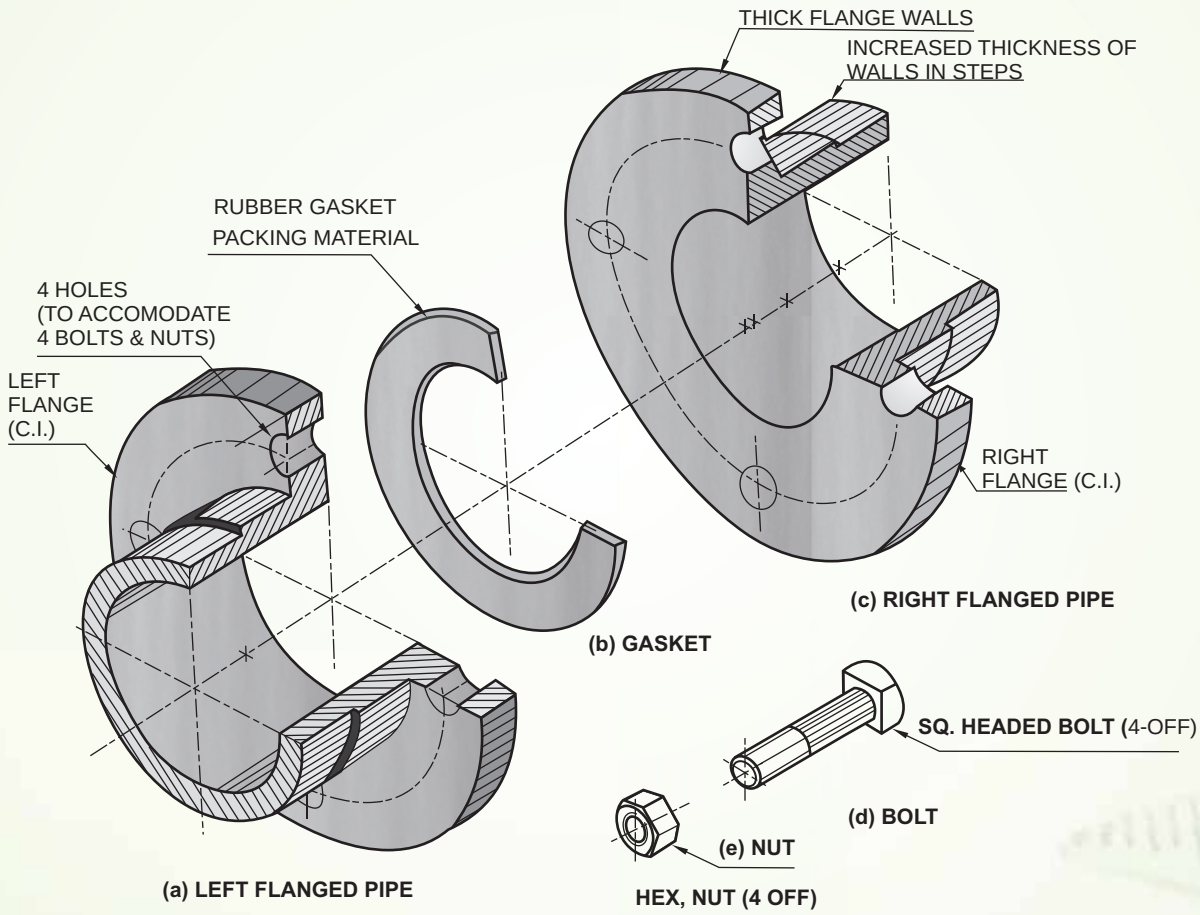

DETAILS OF A FLANGE PIPE JOINT (HALF SECTIONAL PICTORIAL VIEW)

Fig. 5.13

tight and leak-proof. In order to do so, a mechanism similar to the one, we use in pressure cookers is utilized i.e., here also we have a similar thin circular packing ring/gasket of soft material, such as Indian rubber, canvas etc. coated with red lead. This is placed in between the faces of the two flanges. For perfect alignment, these faces are machined at right angle to the axes of the pipes. Then these flanges with the gasket in between are connected together by means of nuts and bolts which are fitted through the holes in the flanges. (The bolts and nuts may be square-headed or hexagonal-headed in shape.)

Thus, it can be seen that flange joints help in easy and fast disassembly to withstand higher pressures.

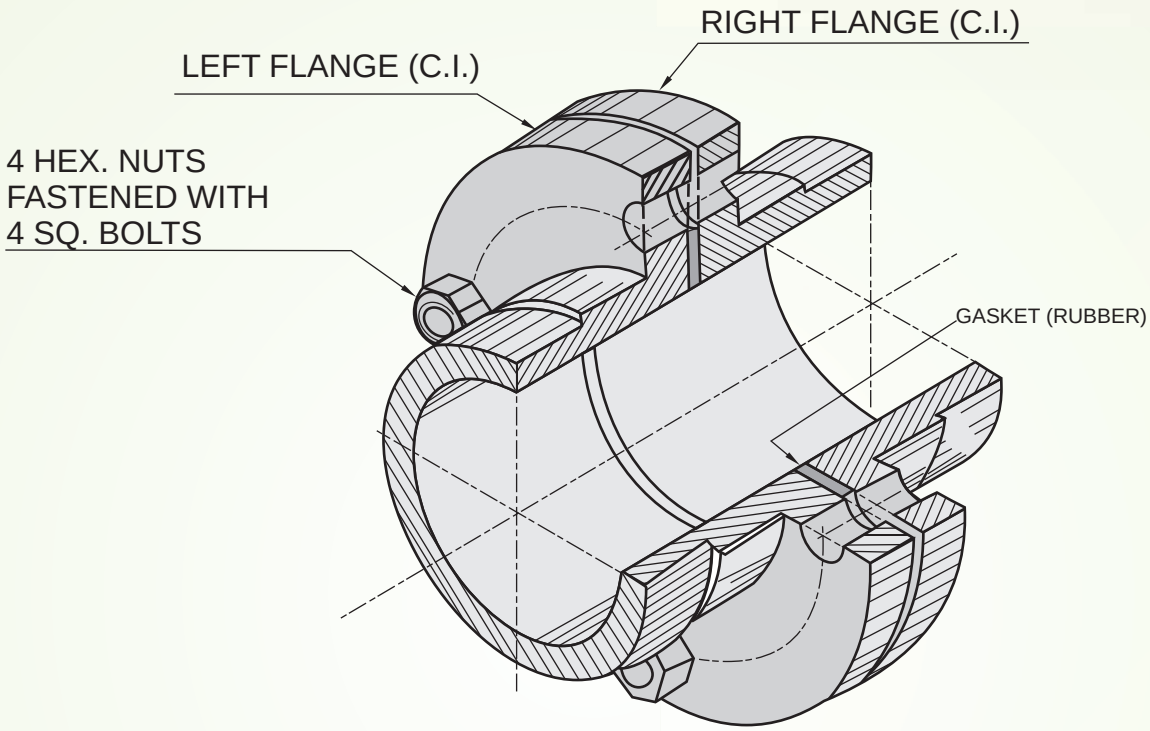

ASSEMBLY OF CAST - IRON FLANGED JOINT
(HALF IN SECTION - PICTORIAL VIEW)

Fig. 5.14

5.2.1.2 ORTHOGRAPHIC VIEWS

Let us now understand the orthographic views of different parts of the Flanged Pipe Joint and learn to assemble them correctly. And then draw the sectional view & other orthographic views of the assembly.

Example 1: Figure 5.15 shows the details of the parts of a Flanged Pipe Joint. Assemble these parts correctly and then draw to scale 1:1, its following views:

(a) Front view, upper half in section.

(b) Side view, as viewed from left.

Write heading and scale used. Draw projection symbol. Give six important dimensions

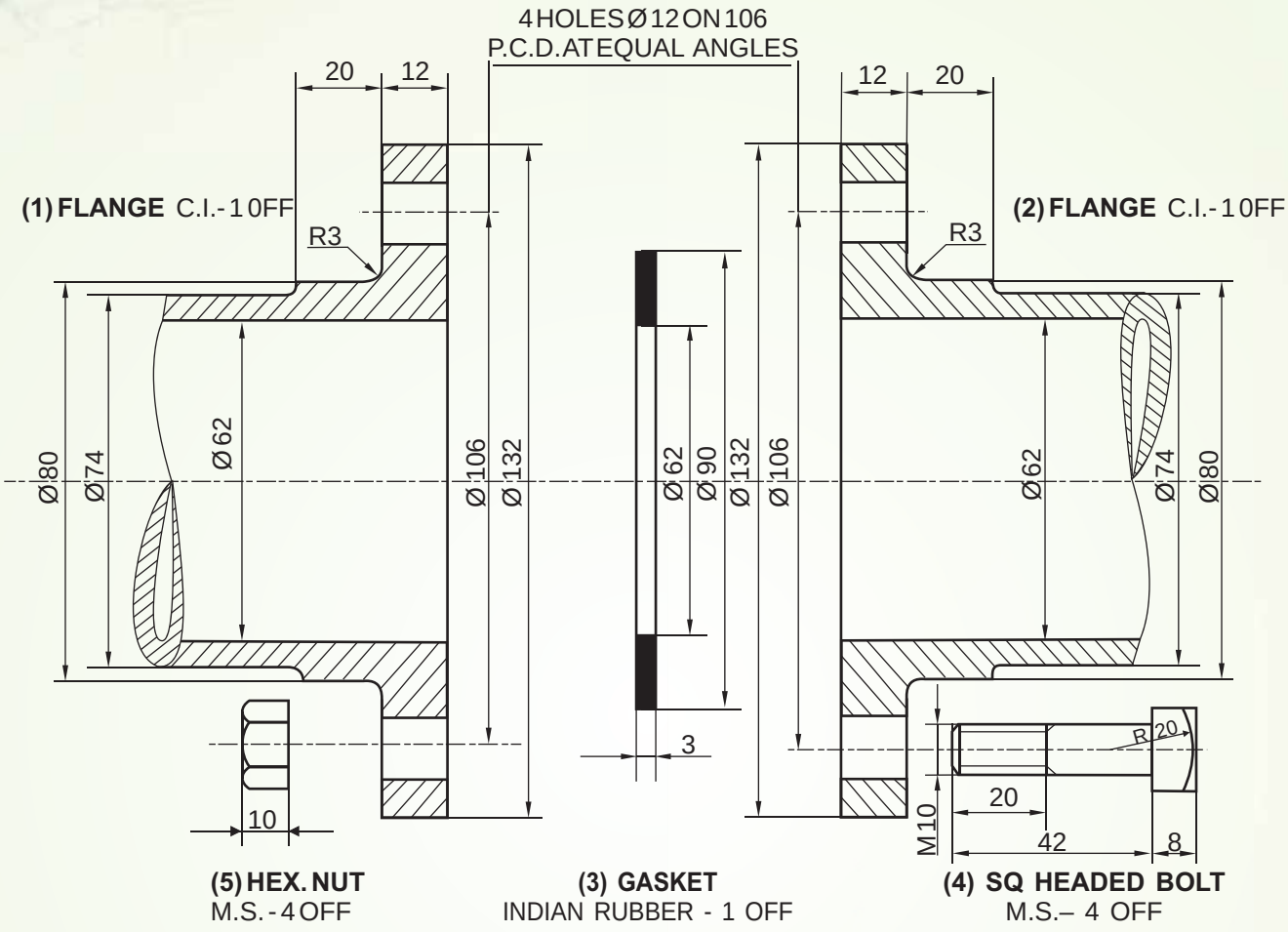

DETAILS OF A FLANGED PIPE JOINT

Fig 5.15

Solution: In the figure 5.15, the front view of all the parts of the Flanged Pipe Joint are shown. Let us assemble these parts as learnt in the previous section.

1. As discussed earlier, the gasket is placed between the two flanges. (It can be seen, the inner diameters of all the three parts i.e. the two flanges and the gasket are same (Ø62) and all will be in a line.)

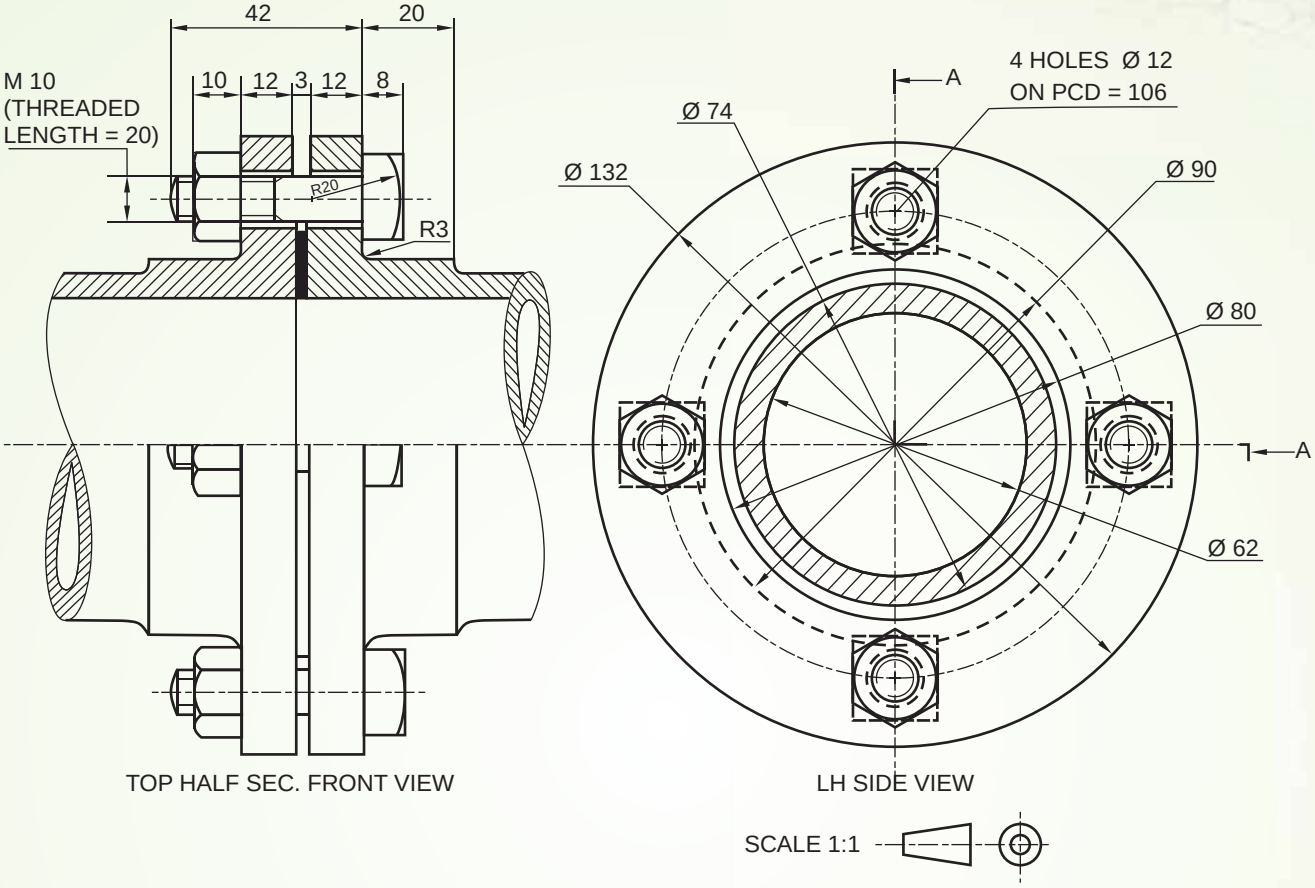

ASSEMBLY OF A FLANGED PIPE JOINT

Fig 5.16

2. Then, the four square (SQ) headed bolts are fitted in the holes as shown in the flanges centrally; the distance between the axes of holes being Ø106 (PCD). (It can be seen, the holes are of Ø12 and the bolts & nuts have diameter 10mm, so a gap (clearance) of 1mm is present around and is shown in the top and bottom of the shank of the bolt, placed in the holes, in the front view.) Refer Fig 5.16.

3. Since, sectional front view (upper half in section) is asked, so both the flanged pipes are sectioned in opposite directions, as they are different machine parts. The gasket, being a thin section, may be shown entirely black as per SP-46 : (2003) BIS specifications (10.2.3). Notice the cross-section of the pipe (to represent a hollow cylindrical section.)

4. In the side view, which is a complete view, all the bolts and nuts (bolt head in hidden lines) are shown on the ring of diameter 106, i.e. PCD (pitch circle diameter).

Let us consider another example, to understand the assembled views correctly.

Example 2 Fig 5.17 shows the details of a Flanged Pipe Joint. Assemble these parts correctly, and then draw the following views to a scale full size:

(a) Front view, showing bottom half in section

(b) Side view as seen, from the right.

Print title and scale used. Draw the projection symbol. Give important dimensions.

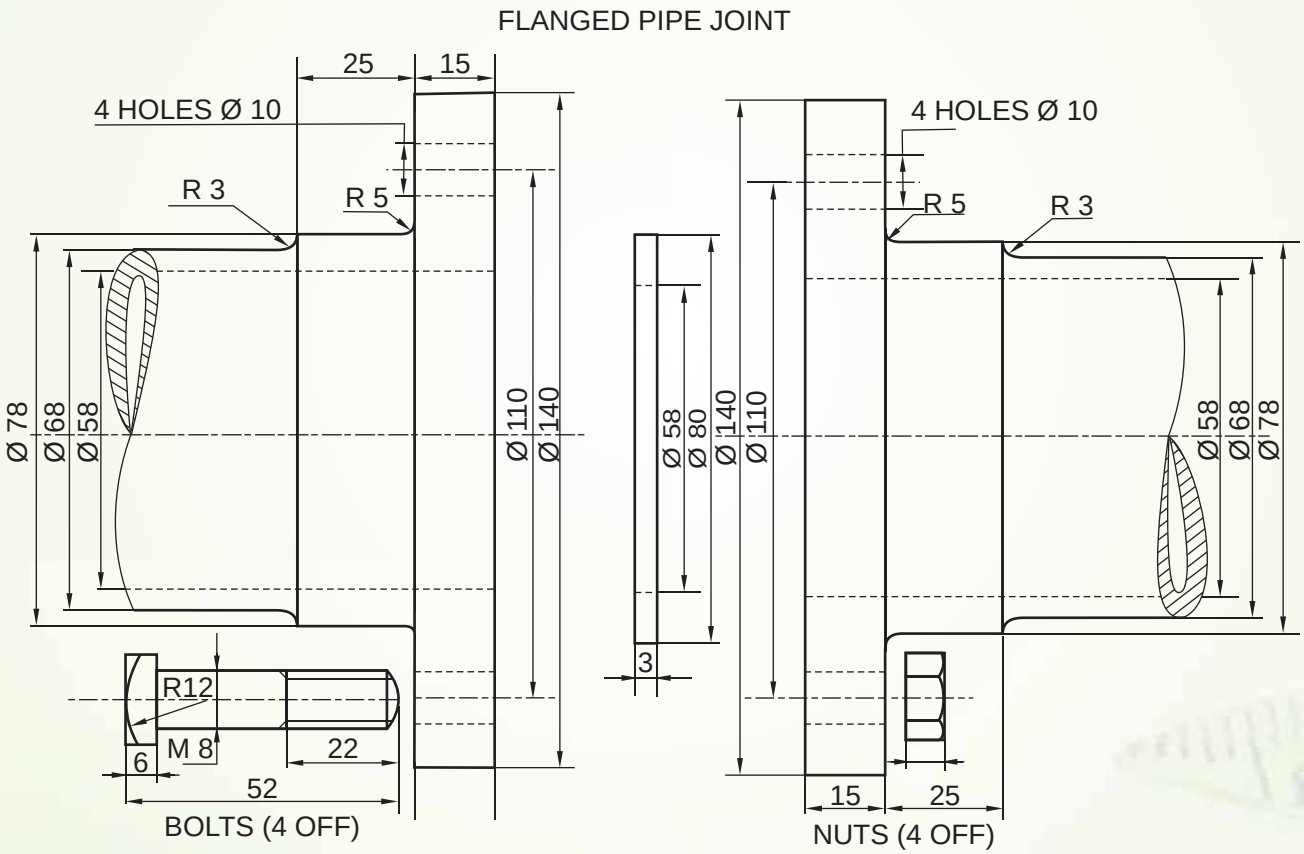

DETAILS OF A FLANGED PIPE JOINT

Fig. 5.17

Solution: In the above given fig 5.17, the orthographic (front) views of different parts are given. Let us assemble them properly and then draw the required views, as shown in the fig 5.18

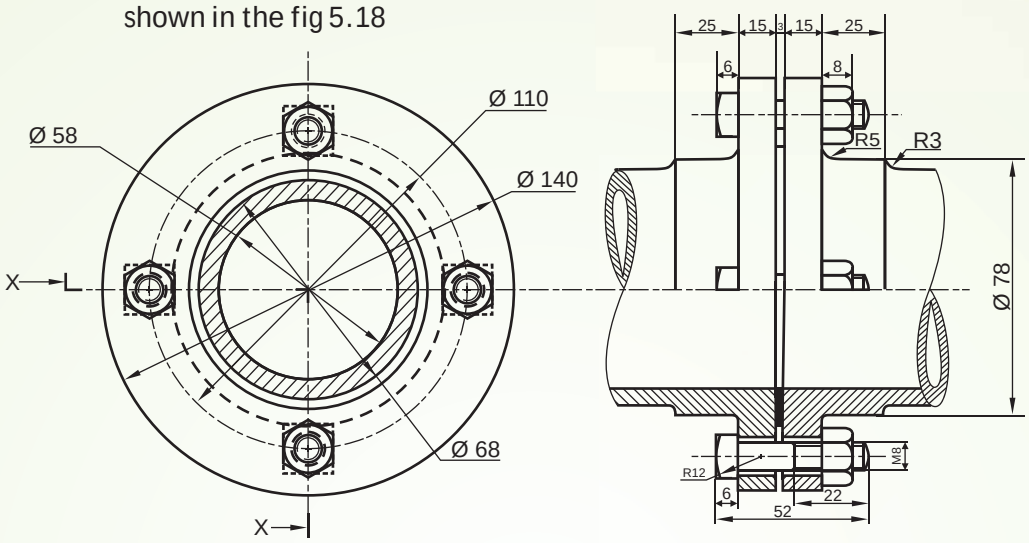

RH SIDE VIEW FRONT VIEW (BOTTOM HALF IN SECTION) AT X-X

ASSEMBLY OF A FLANGED PIPE JOINT

Fig 5.18

Exercise 5.2 Figure 5.19 shows the details of parts of the Flanged Pipe Joint. Assemble these parts correctly and then draw the following views to full-size scale:

(a) Upper half sectional front view

(b) Left-hand side view.

Print title and the scale used. Draw the projection symbol. Give six important dimensions.

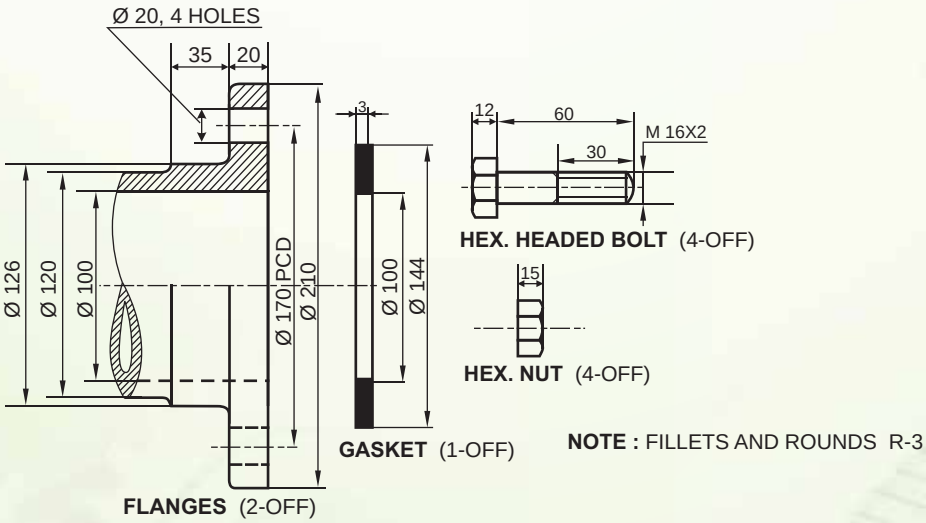

DETAILS OF A FLANGED PIPE JOINT

Fig 5.19

WHAT HAVE WE LEARNT

1. Turnbuckle/Tie-rod Joint is an adjustable temporary joint, which connects the ends of two rods axially when they are subjected to push/pull (tensile) forces.

2. It consists of:

   (a) **Body:** A hollow cylinder with tapered ends having threaded holes & a central slot.

   (b) **Left-hand (LH) threaded rod:** The rod end as left-hand threads.

   (c) **RH-threaded rod:** This rod end has opposite hand threads (i.e. right-hand screw threads)

3. The threaded rod ends are screwed in or out of the body to tighten or loosen the joint or adjust the length.

4. Turnbuckle is used in the guy ropes, wires of electric poles, rigging wires of ship, wrestling rings etc.

5. 'Pipes' are used to transfer liquids or gas from one place to another, and are made of various materials like cast iron, steel, copper, concrete, plastic etc.

6. Pipes are connected to each other in different ways; known as 'Pipe Joints' to increase the length or to connect two different fittings.

7. Several type of pipe joints are available, which depend upon the material and type of service.

8. 'Flange Pipe Joint' is used to connect large diameter pipes, especially cast-iron pipes.

9. It consists of:

   (a) **Flanged pipes:** The pipes have integral flared rim at the ends (flange) and may have thicker walls in steps for strength.

   (b) **Gasket:** A circular thin ring of soft material, placed between the flanges to keep the joint leak-proof.

   (c) **Nuts & bolts:** Used to fasten the two flanges. May be hexagonal or square headed.

10. The two cast iron pipes with integral flanges are connected together by means of bolts and nuts, and the gasket/packing material in between the flanges, to keep it tight & leak-proof.

11 Flange Pipe Joint can be seen in underground water system, gas lines, drainage systems etc.

CHAPTER 6

SHAFT COUPLINGS

Shafts as we have learnt in the previous chapters, mechanical/machine parts that are commonly used to transmit power from one end of the machine/unit to another. But what, if these ends are distance apart. Moreover the shafts are made of limited lengths for ease of transport arts, so in such a case, we would connect the shafts to form a long transmission shaft, as we have done in case of joints in the earler chapter.

Similarly Even in case of power transmission between different machine to unit, as seen, between a motor and a generator or pump, the shafts need to be joined together a to transmit rotary motion between shafts of same unit, as well as of different machines / unit. And to do so, we have devices known as "couplings" which are used to "join two shafts".

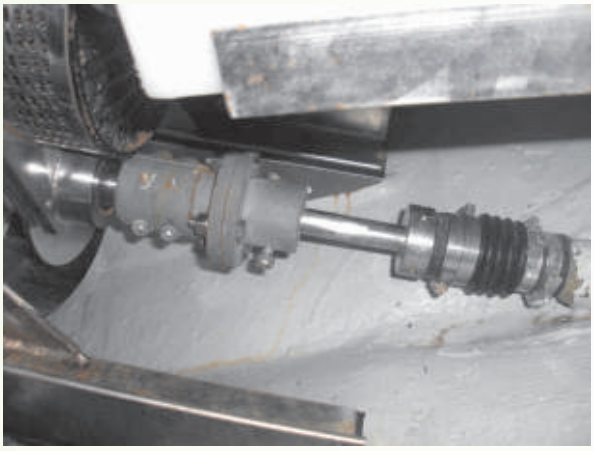

(a) In an automobile

(Connecting shafts of Different machines)

(b) under a locomotive

(Connecting shafts of the same unit)

SHAFT COUPLINGS

Fig. 6.1

Several types of couplings are available depending upon the type of transmission and relative position of the shaft. In this book, we will be discussing only the widely used type i.e. Flange Coupling.

6.1 FLANGE COUPLINGS

This is a standard form of coupling and is extensively used. It can be seen in large power machines and is used for heavy loads.

It is classified into two types depending upon its shape:

a. Unprotected Flange Coupling

b. Protected Flange Coupling.

(a) Unprotected

(b) Protected

DIFFERENT TYPES OF FLANGE COUPLINGS

Fig 6.2

Let us study these type of Flange Couplings in detail.

6.1.1 UNPROTECTED FLANGE COUPLING

As the name suggests, this type of coupling also has flanges (projected rim) and resembles the Flange Pipe Joint learnt in the previous chapter. Let us know more about its parts and see, why it is called as 'unprotected'.

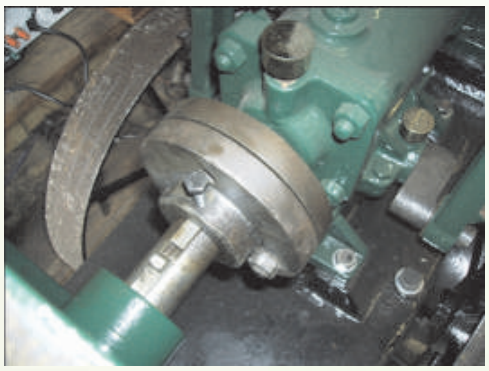

THE UNPROTECTED FLANGE COUPLING CONNECTS THE SHAFTS FROM A PUMP TO THAT OF A ENGINE

Fig 6.3

6.1.1.1 Features:

The Unprotected Flange Coupling has two similar cast iron flanges, (left & right) with the shape similar to the flanges in the 'flanged pipe joint'. But these flanges have keyways in the hubs, so that the ends of the shafts to be connected can be keyed to the flanges with separate rectangular sunk type keys. Even the shafts also have keyways, which are assembled at right angles, so that the key of one shaft does not slide into the other. These keys are usually driven from inside faces of the flanges for easy fitting.

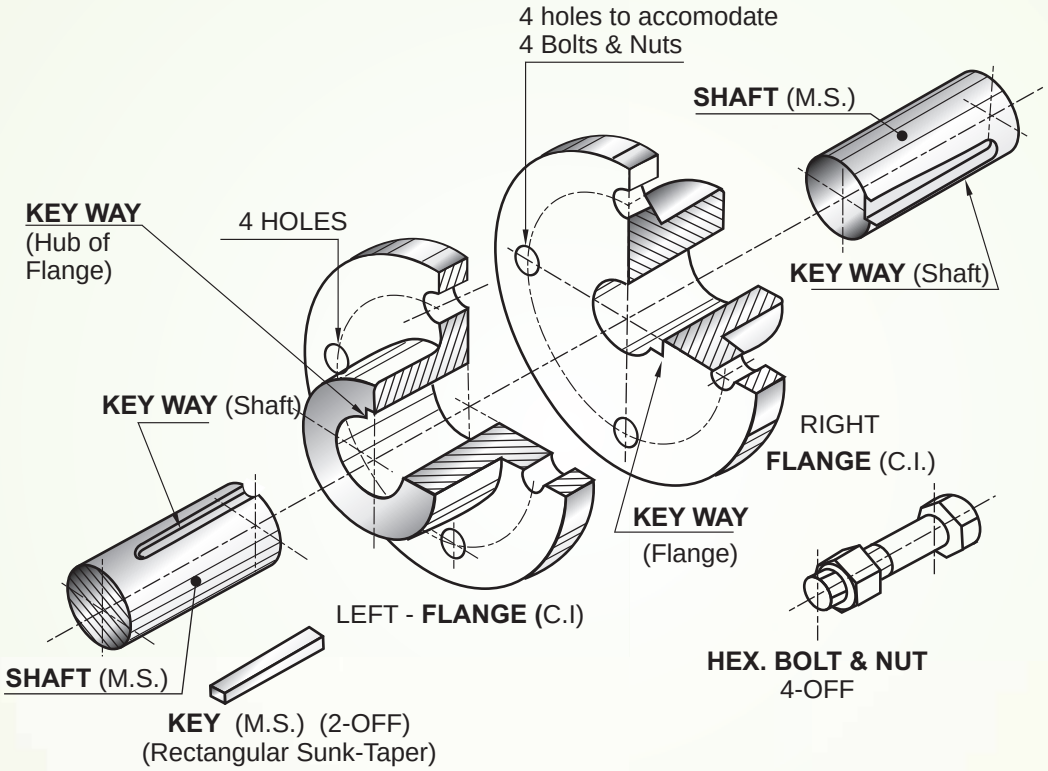

DETAILS OF AN UNPROTECTED FLANGE COUPLING
(HALF SEC. PICTORIAL VIEW)

Fig 6.4

Here also, the faces of the flanges are kept at right angles to the axis for proper alignment. Now, to get the perfect alignment of shafts, one of the flanges may have a projected circular extension on the outside and thus the other flange will, have a corresponding slot / recess. This gives the flanges a perfect fit and this kind of arrangement being similar to the spigot and socket joint, is termed as 'spigot and socket centring'. There may also be some clearance (gap) between this kind of fit, to adjust the shaft.

The faces of the two flanges are then held together with the help of bolts and nuts (4 or more). These may be square headed or hexagonal headed. The bolts should be an exact fit, so that the power can be transmitted properly from one shaft and flange to another.

It can also be noticed, as shown in Fig. 6.5 that the bolt and nuts lie outside, (exposed) and during rotation of shafts, as well as flanges, they are not visible to the workers, and thus might hurt them or their clothes, may get entangled. Hence this flange coupling get the name as Unprotected Flanges Coupling.

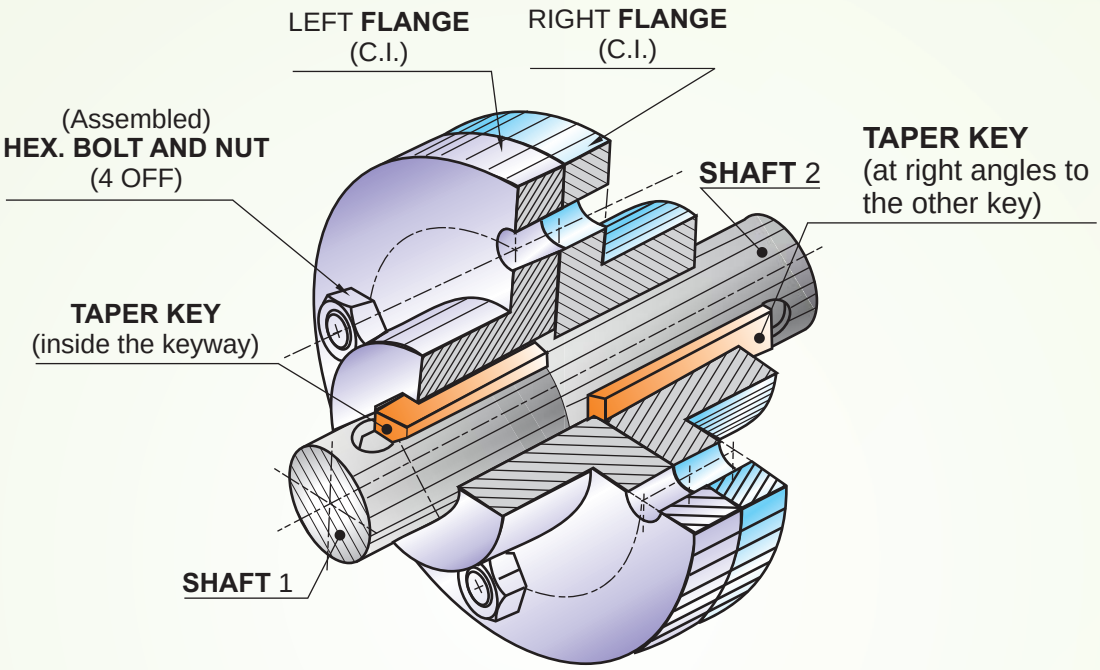

ASSEMBLY OF AN UNPROTECTED FLANGE COUPLING
(HALF IN SECTIONAL PICTORIAL VIEW)

Fig 6.5

To avoid such mishaps, the shape of the flange is slightly modified, which will be discussed further in the next type of flange coupling.

6.1.1.2 Orthographic Views

With the help of an example, let us learn to assemble the different parts of the 'Unprotected Flange Coupling' and draw the required orthographic views, including the sectional view.

Example 1: Fig 6.6 shows the details of an 'Unprotected Flange Coupling'. Assemble the details and draw the following views of the assembly using scale full size.

a. Front view, top half in section.

b. Left side view.

Print title and scale used. Draw the projection symbol. Give important dimensions

Solution: In fig 6.6, the orthographic views of different parts are shown. Let us assemble them as learnt and then draw the orthographic views.

(i) It can be seen flange is given as (2-OFF), i.e. two flanges of same dimensions. Similarly, the shafts, keys and even bolts and nuts have same dimensions.

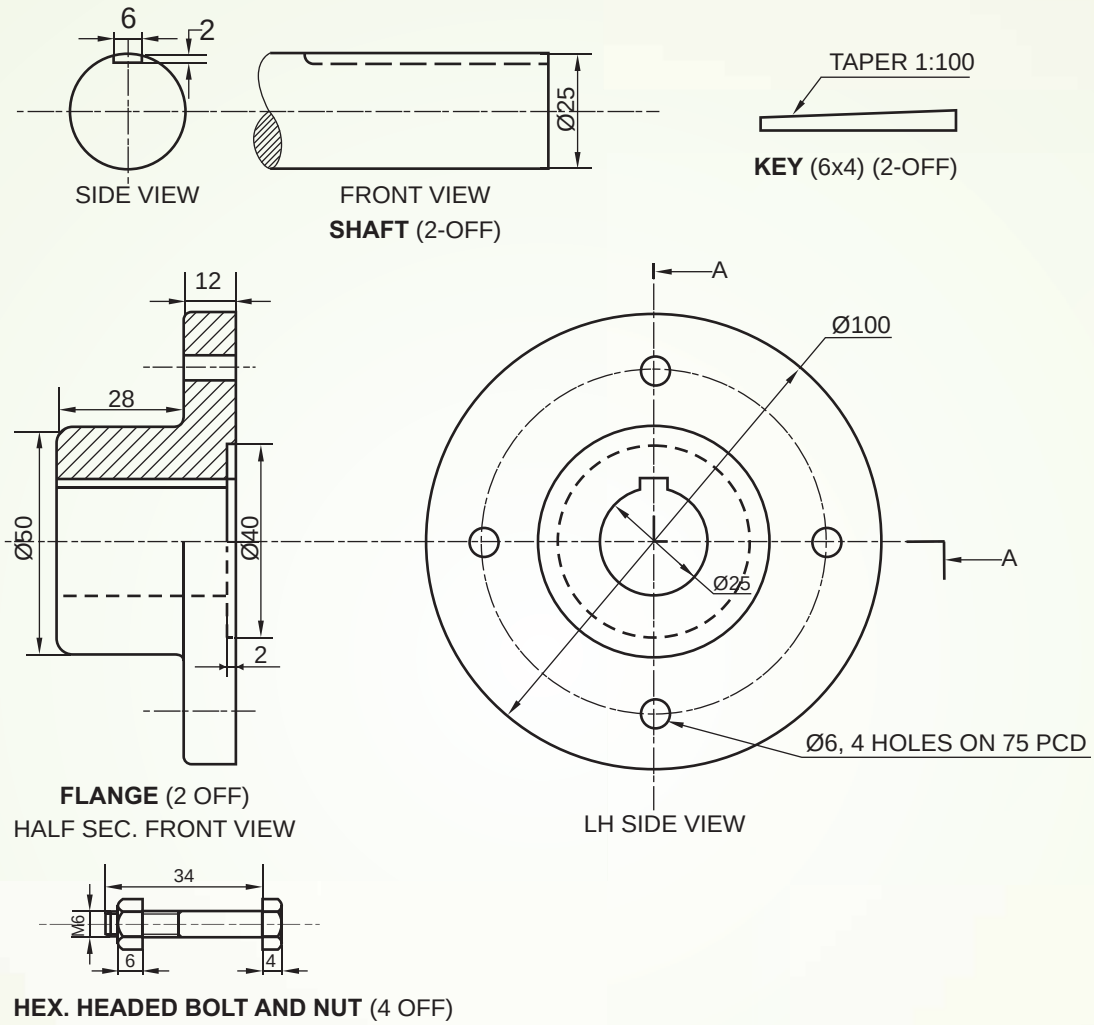

DETAILS OF AN UNPROTECTED FLANGE COUPLING

Fig 6.6

(ii) Also note, the two flanges are arranged in a socket and spigot arrangement with a recess / extension of 2 mm.

(iii) Even the keys are rotated at right angles to each other. One is placed on top of the shaft and the other near the axis, centrally. Also notice, the width of the keys drawn in the front view vary as shown in fig 6.7.

(i) The keys may not be more than 3 mm beyond the bosses of the flanges and the keyways need not extend more than 15 mm beyond the ends of the keys.

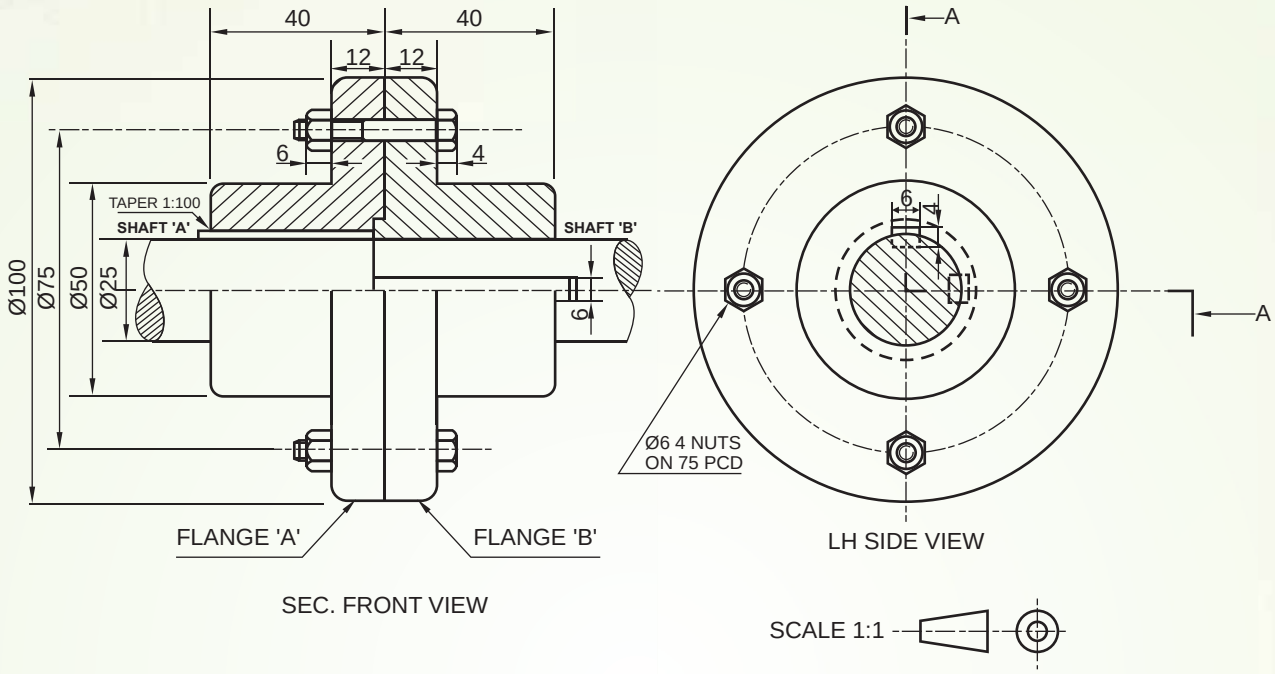

ASSEMBLED VIEW OF AN UNPROTECTED FLANGE COUPLING.

Fig 6.7

Let us consider another example and draw the assembled views properly.

Example 2 : Fig 6.8 shows the parts of an Unprotected Flange Coupling (having socket and spigot arrangement). Assemble these parts correctly and then draw the following views to a scale full size:

a. Front view, upper half in section

b. Side view, as seen from right.

Print title and scale used. Draw the projection symbol. Gives important dimensions.

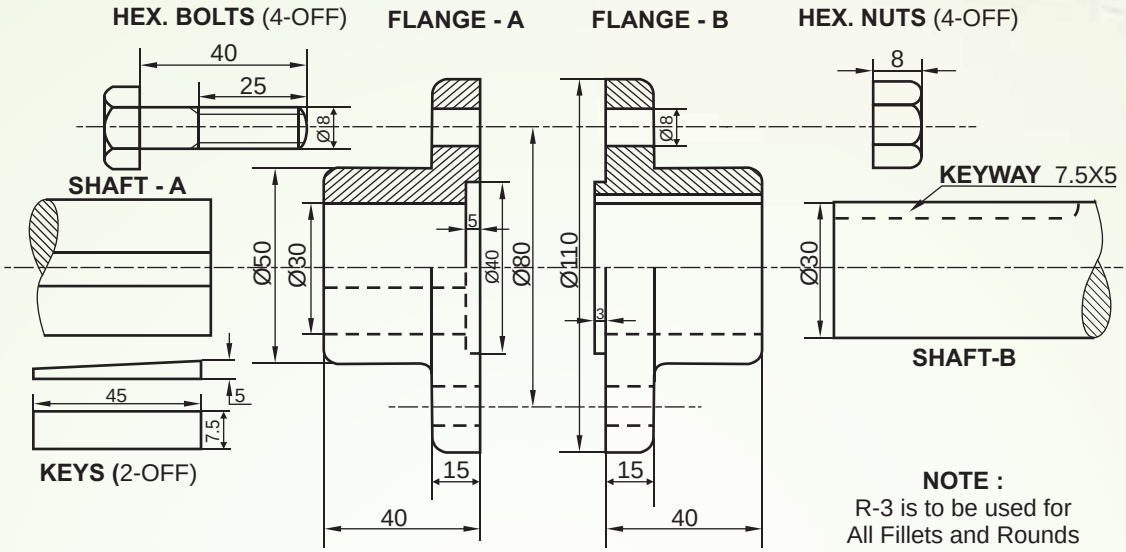

DETAILS OF AN UNPROTECTED FLANGE COUPLING.

Fig 6.8

Solution: Similar to the previous example, we will assemble the various parts correctly and then obtain the required orthographic views, including the sectional view as shown in the below fig 6.9.

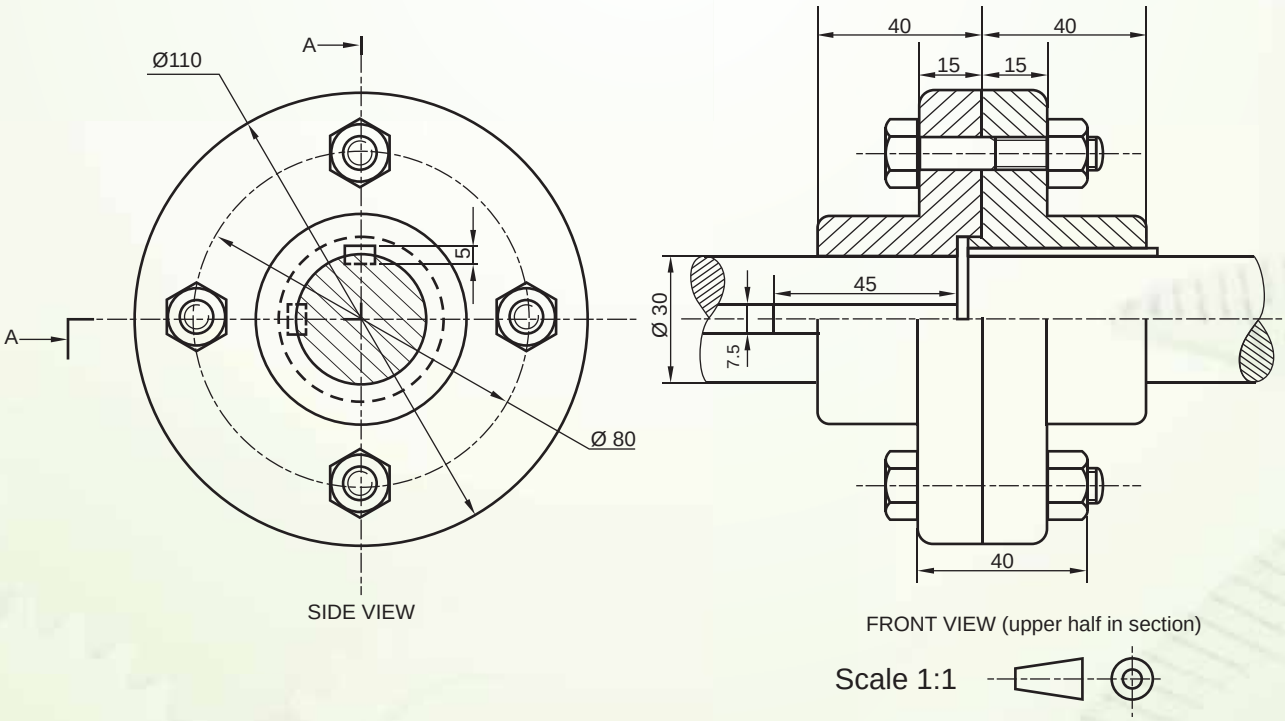

ASSEMBLED VIEWS OF AN UNPROTECTED FLANGE COUPLING

Fig 6.9.

Exercise 6.1

Fig 6.10 shows details of an unprotected Flange Coupling. This figure shows one view, each of the part no. 1, 2 and 3 and two views of part no.4. Draw to a scale 1:1, the following orthographic views.

a. Elevation, upper half in section

b. Right hand side view, without section.

Show the dimensions properly. Print title and scale used and draw the projection symbol.

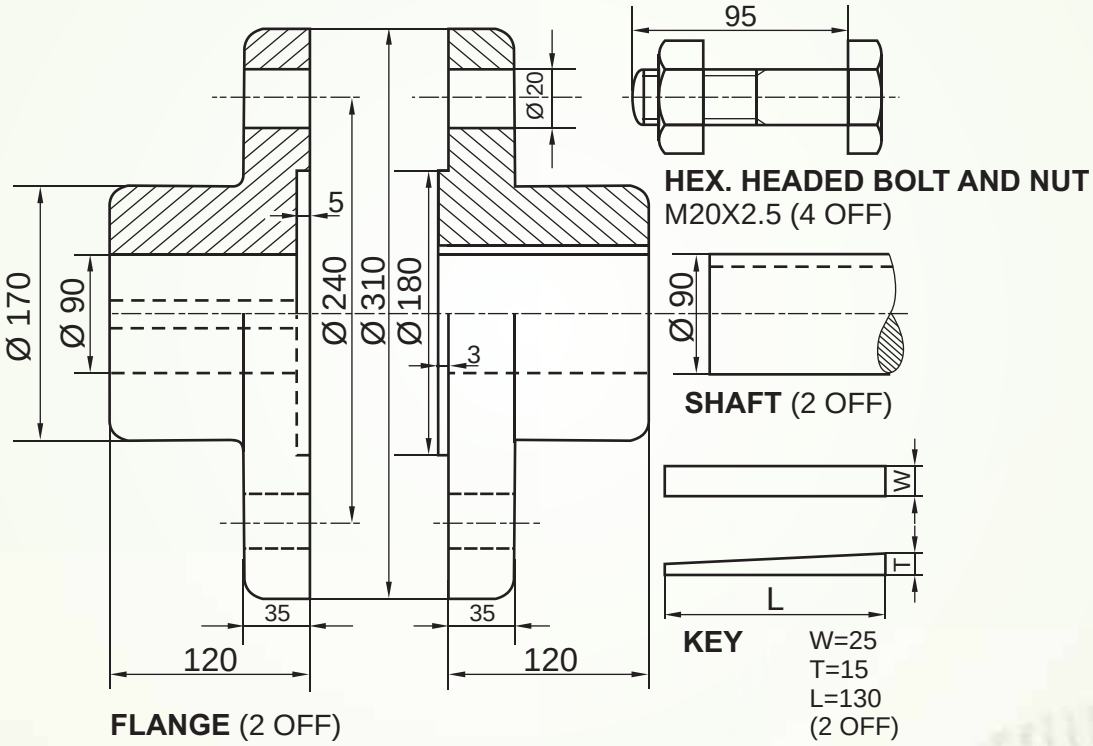

DETAILS OF AN UNPROTECTED FLANGE COUPLING

Fig 6.10

6.1.2 Protected Flange Coupling

We know, the pervious type of flange coupling (Unprotected) has a shortcoming which is overcome in this type of Flange Coupling. To do so, we need to shield/cover the protruding nuts or bolt heads. And this can be done by slightly altering the shape of the flanges. So the flanges have a flared and flattened rim i.e. a projected outer ring (shroud) as shown in the figure. This overhangs over the bolt heads and nuts and thus minimizes accidents and ensures safety, Hence it is named as a 'Protected Flange Coupling'.

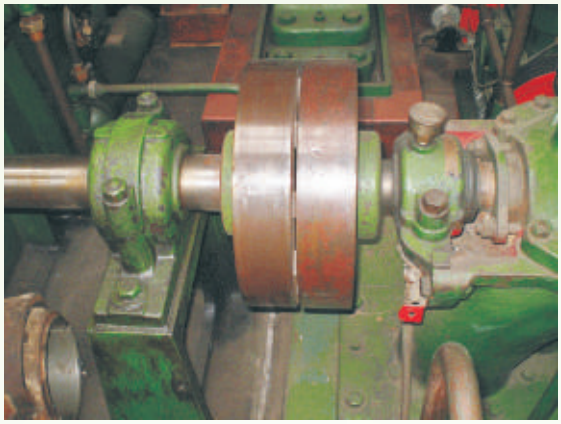

PROTECTED FLANGE COUPLING IN A DIESEL ENGINE

Fig 6.11

This type of coupling may be sometimes used as belt pulley.

6.1.2.1 Features

The 'protected' type Flange Coupling contains the same parts and is assembled in the same way as an 'Unprotected type Flange Coupling'. The only difference lies in the shape of the flange with its projected ring (shroud) as shown in fig.6.12.

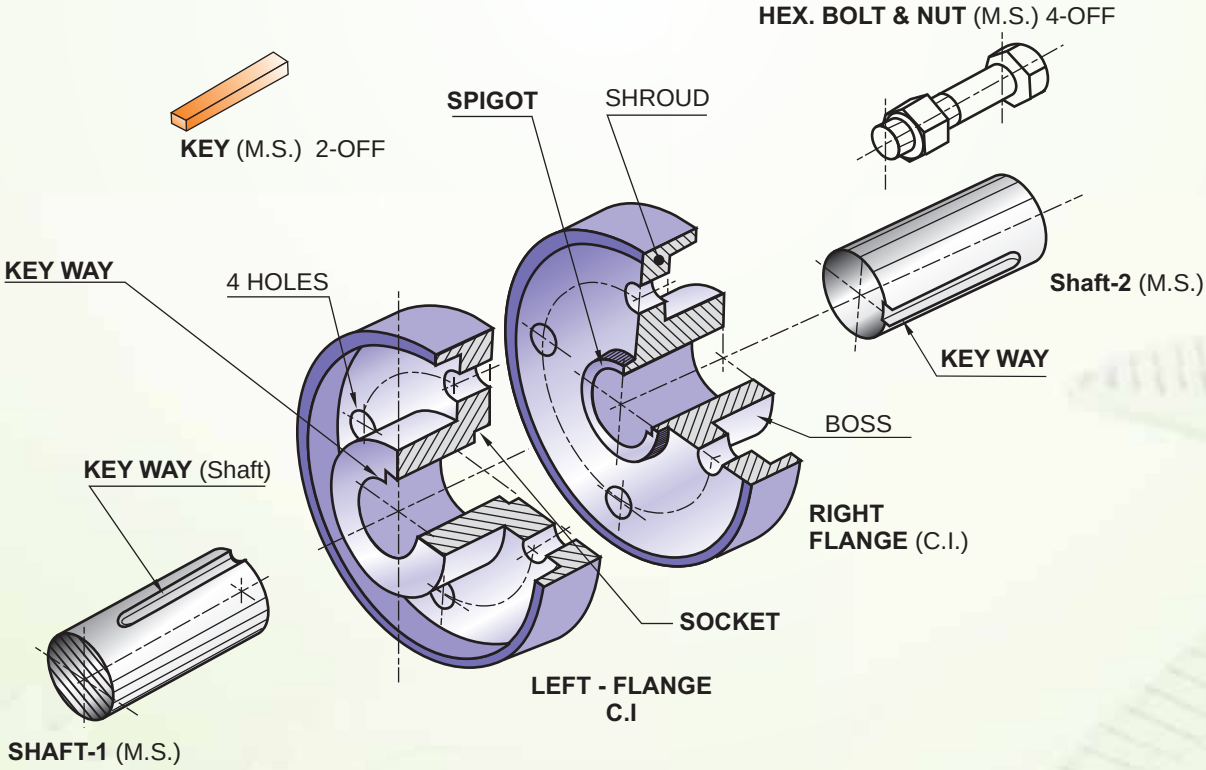

EXPLODED VIEW OF DETAILS OF A PROTECTED FLANGE COUPLING (HALF IN SECTION)

Fig 6.12

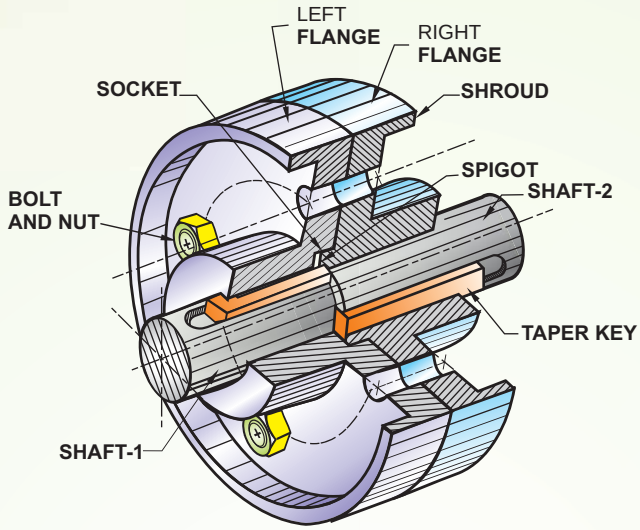

ASSEMBLED PICTORIAL VIEW OF A PROTECTED PLANGE COUPLING (HALF IN SECTION)

Fig.6.13

6.1.2.2 Orthographic Views

Let us learn to assemble different parts of a 'Protected Flange Coupling' and draw the respective orthographic views, with the help of an example:

Example 3: fig 6.14 shows details of the parts of a 'protected typed flange coupling'. Assemble the parts correctly and then draw the following views to scale full size:

a. Half sectional front view (upper half in section).

b. Side view, as seen from left.

c. Print title and scale used. Draw the projection symbol. Give dimensions.

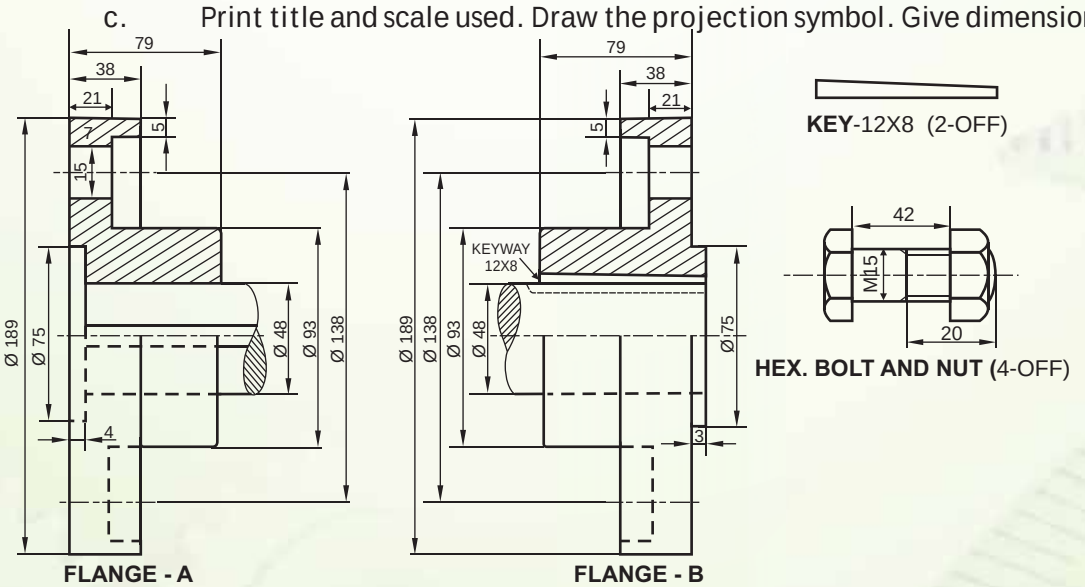

DETAILS OF A PROTECTED FLANGE COUPLING

Fig 6.14

Solution: Details of the Protected Flange Coupling are shown in Fig 6.14. Let us assemble them properly and draw the required orthographic views.

1. Here also, it can be seen that the flanges have 'spigot and socket arrangement'.
2. The parts are assembled in the similar manner as we had done for the questions based on 'Unprotected Flange Coupling'.
3. The only variation which can be seen here is that bolt and nut are not visible in the lower half which is without section in the front view.
4. The side view also has an extra circular ring for the 'shrouded flanges.

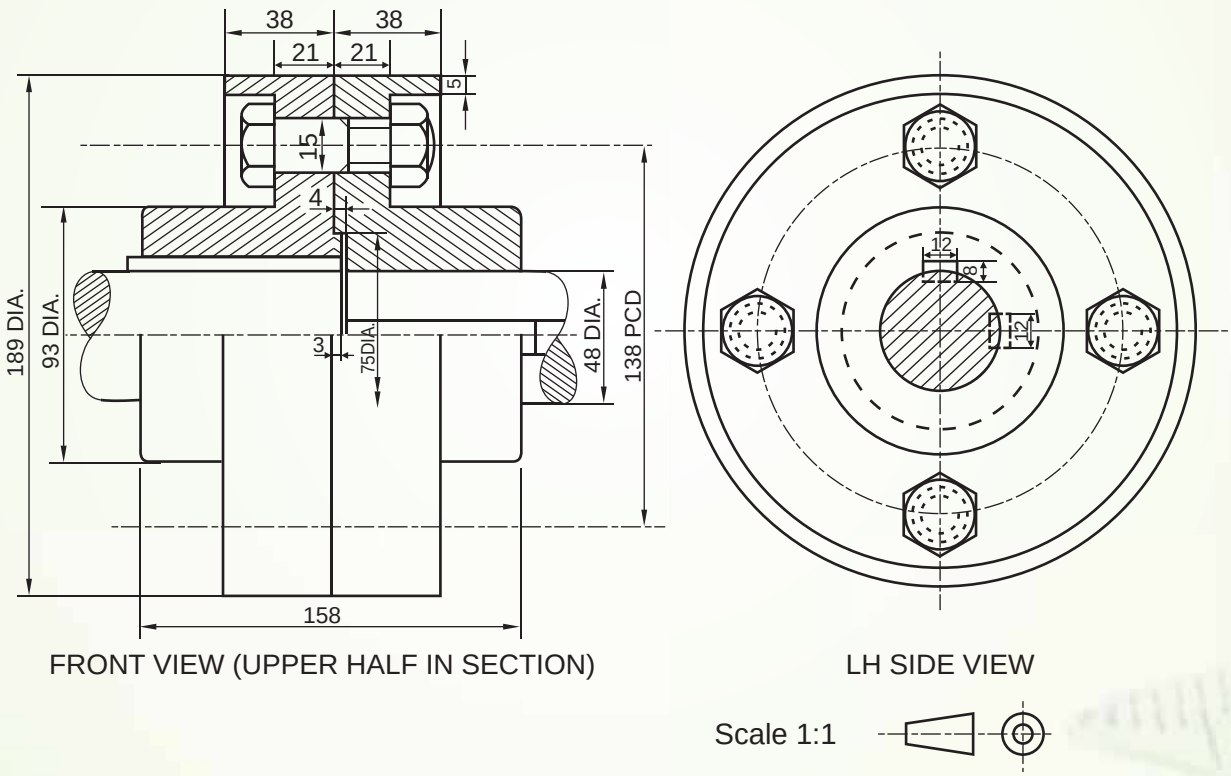

ASSEMBLY OF A PROTECTED FLANGE COUPLING

Fig 6.15

Let us take another example, and draw the required assembled views.

Example 4: Figure 6.16 shows details of the parts of a Protected Flange Coupling. Assemble these parts correctly and draw the following views to scale full- size:

a. Elevation. Top - half in section

b. End view, as seen from right.

Print title, scale used. Draw the projection symbol. Give main dimension.

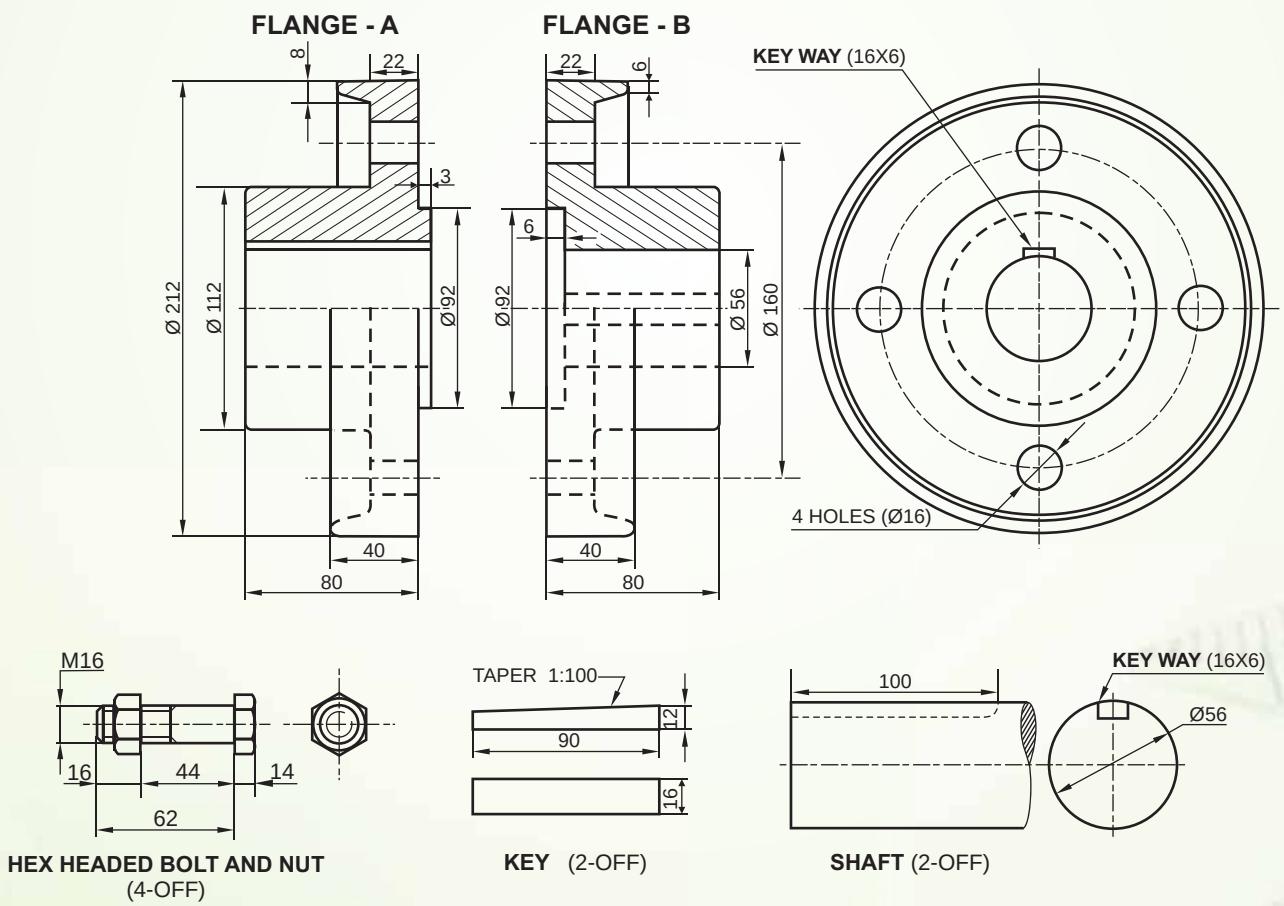

DETAILS OF A PROTECTED FLANGE COUPLING

Fig 6.16

Solution: Let us assemble the different parts and draw required views in the similar manner as done in the previous example.

A slight variation is seen in the spigot and socket arrangement. It can be seen that a gap Clearance of 3 mm is present between them as shown in fig 6.17)

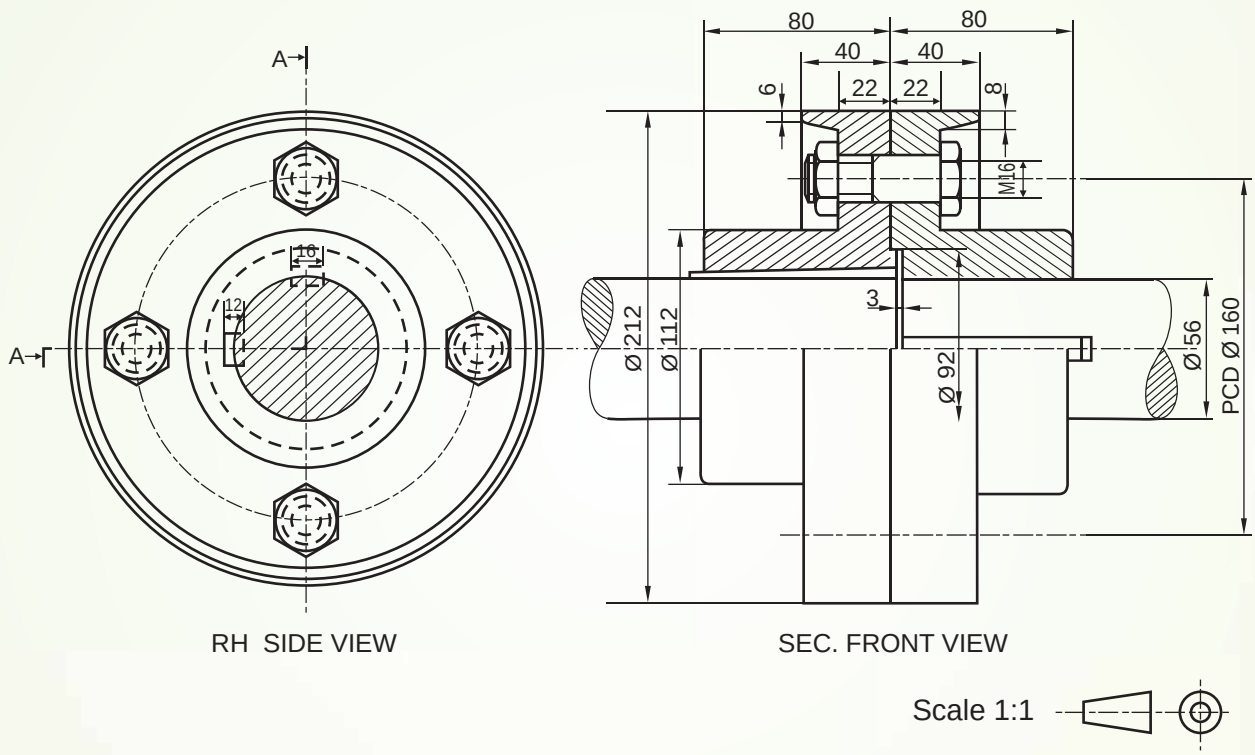

ASSEMBLY OF A PROTECTED FLANGE COUPLING

Fig 6.17

Exercise 6.2

1. FIG 6.18 shows the details of the parts of a 'Protected Flange Coupling'. Assemble them correctly and draw the following views to scale 1:1.

   a. Half - sectional Front view, lower half in section

   b. Left hand side view

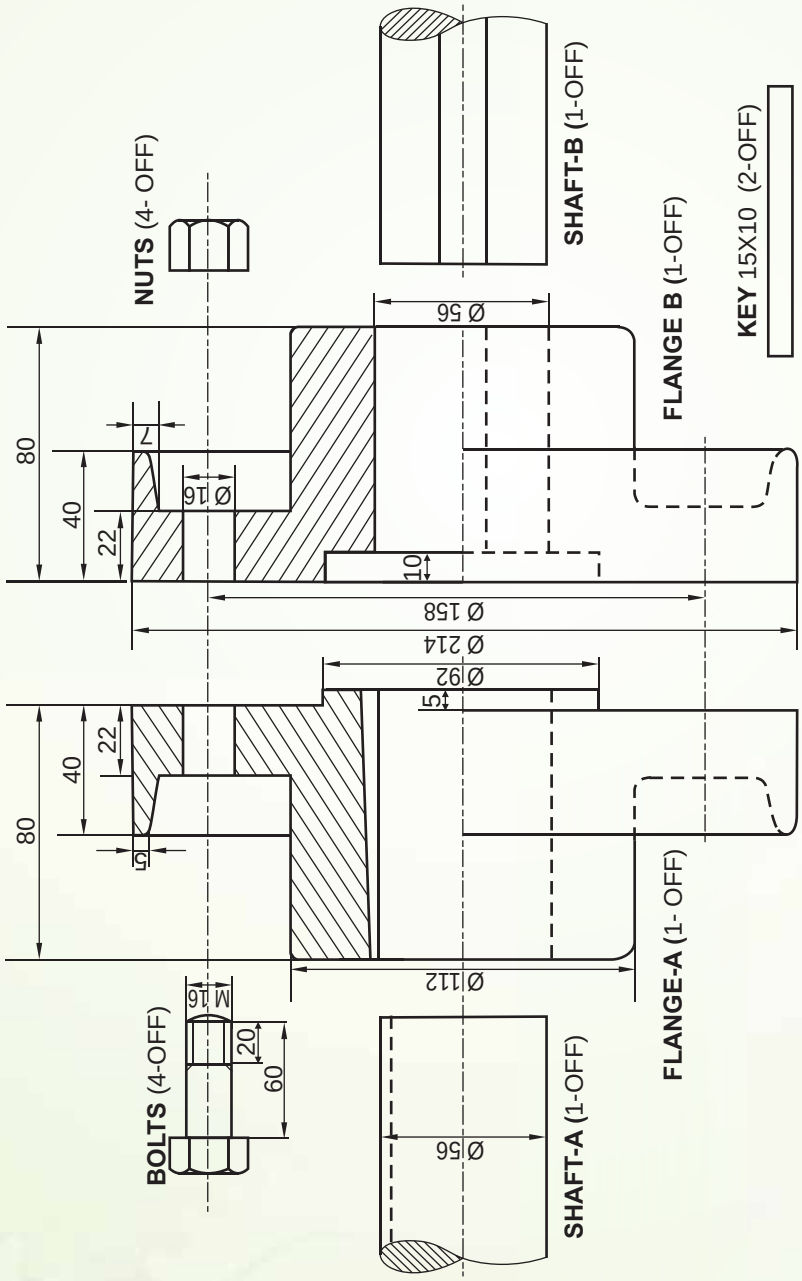

DETAILS OF A PROTECTED FLANGE COUPLING

Fig 6.18

Print the title and scale used. Draw the projection symbol. Give important dimensions

WHAT WE HAVE LEARNT

1. Coupling are devices used to join two shafts end to end. This may be done to increase the length of the shaft or to connect shafts of different machines.

2. Flange Coupling is a type of shaft coupling which is widely used.

3. 'Flange Coupling' uses two 'Flanges' (one for each shaft), fixed with keys (sunk taper) and joined with bolts and nuts (square or hexagonal).

4. There are two type of Flange Coupling

a. Protected

b. Unprotected.

5. 'Protected Flange Coupling' is Provided with an extended protruding ring in the flange to cover the heads of bolts & nuts, to avoid any injury from them while rotating.

6. A step of 2-3 mm on one flange and groove in the other (Spigot and socket arrangement) is also provided for good alignment.

CHAPTER 7

PULLEYS

7.1 INTRODUCTION

In every machine or toy, we use power to operate and perform its function. This power is obtained mostly by the motor, run on electricity or battery. To transfer the power from the motor to the operational part of the machine, we use a combination of pulleys and belt (flexible connector). Pulleys are used in very small sizes to be fitted in wrist watches and tape recorders, as well as quite big in size as in ships.

The pulley used, with the motor shaft is called driver and with machine shaft is called driven. The size of driver and driven pulleys define the ratio of speed transferred as reduced or increased. If both the driver and driven pulley are of same diameter then the speed of the shaft / spindle will be same, if driver is of small diameter with respect to driven then the speed will be reduced at operating shaft and vice versa.

TYPES OF PULLEYS

Fig 7.1

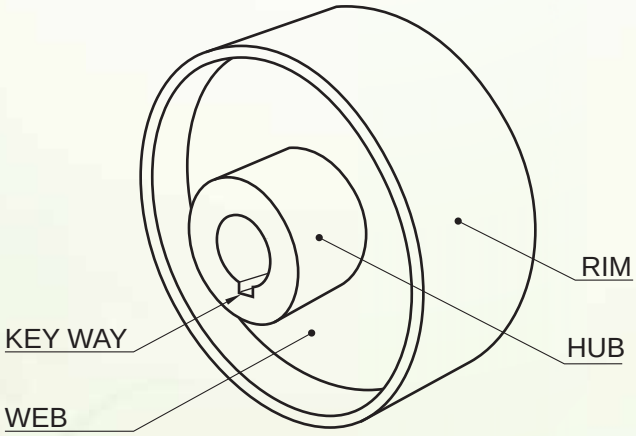

PARTS OF A PULLEY

Fig 7.2

Outer cylindrical surface of the pulley used to hold the belt is called RIM, while the inner cylindrical part to be mounted on the shaft is called HUB. The RIM and the HUB are joined together with solid web or spokes or splines depending upon the size of the pulley. In the pulleys of diameter up to 200 mm a solid web is provided. The pulley is attached to the shaft either by the key or by a set screw of the suitable size and type.

The driver pulley and driven pulley are connected with different type of endless belts i.e. Flat Belt, Rope Belt, V-Belt etc. The material of the belt must be strong in tension yet flexible and relatively light in weight i.e. canvas, leather, rubber and so on.

Pulley - drive is very easy to install and require minimum maintenance. The power is transmitted from one shaft to another by means of friction between the belt and the rim. The losses in power transmission are negligible in V-belt pulley rather than flat-belt pulley. However power transmission capacity reaches its limit when the belt starts to slip.

Now we understand that pulleys allow us to

1. Lift loads up, down and sideways.
2. Rotate things at different speeds.

Pulleys are classified as follows :

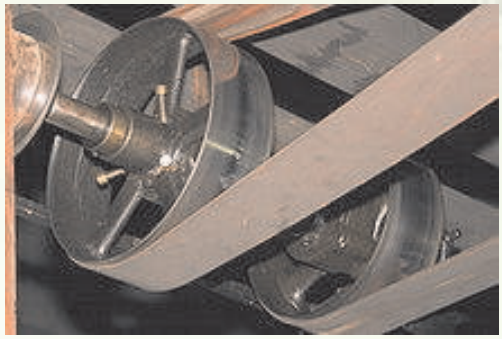

FLAT BELT DRIVE

V-BELT DRIVE

ROPE DRIVE

Fig 7.3

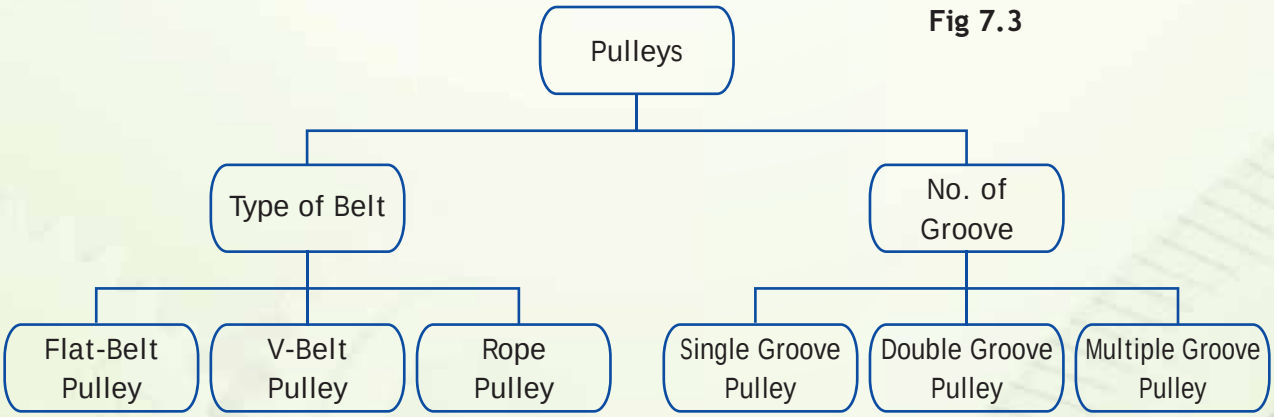

So pulley is a simple machine used in our day to day life to complete the work with less efforts. In this class we will study Flat Belt and V-Belt pulleys, upto 200 mm diameter in detail.

7.2 FLAT BELT (SOLID C.I.) PULLEY

The rim of the flat belt pulley is not flat it is slightly convex and this is known as the crowning. Actually the rotating belt around the pulley has a tendency to rise to the highest point of the rim. In case of a flat rim, there are chances of the slipping off of belt along the side of the pulley. But the crowning (convex curvature) tends to keep the belt in the middle of the rim.

The pulley is rigidly held to the shaft by key. The keyway is cut with half thickness in hub and half in shaft. The hub is having thickness to bear the rotational torque of pulley. The out side of the hub and the inside of the rim are slightly tapered to facilitate the removal of the pattern from the mould at the time of casting.

SOLID WEB
CAST IRON PULLEY
Fig 7.3

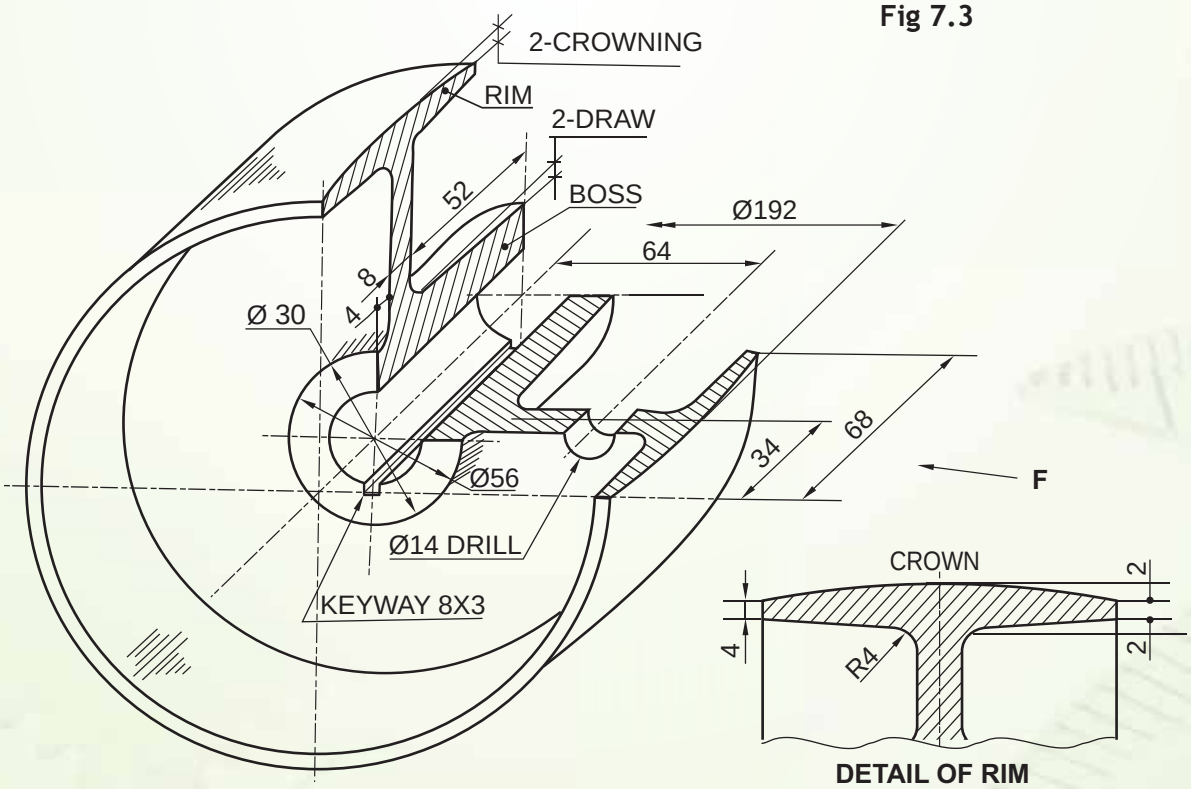

SOLID WEB (C.I.) PULLEY
Fig 7.4

Example 1 :

Draw the following Orthographic Views of the properly assembled Solid C.I. pulley, shaft and Rectangular Taper Key. As shown in Fig 7.5

(a) Front View, upper half in section.

(b) Side View.

Write title and scale used. Draw projection symbol. Give '6' important dimensions.

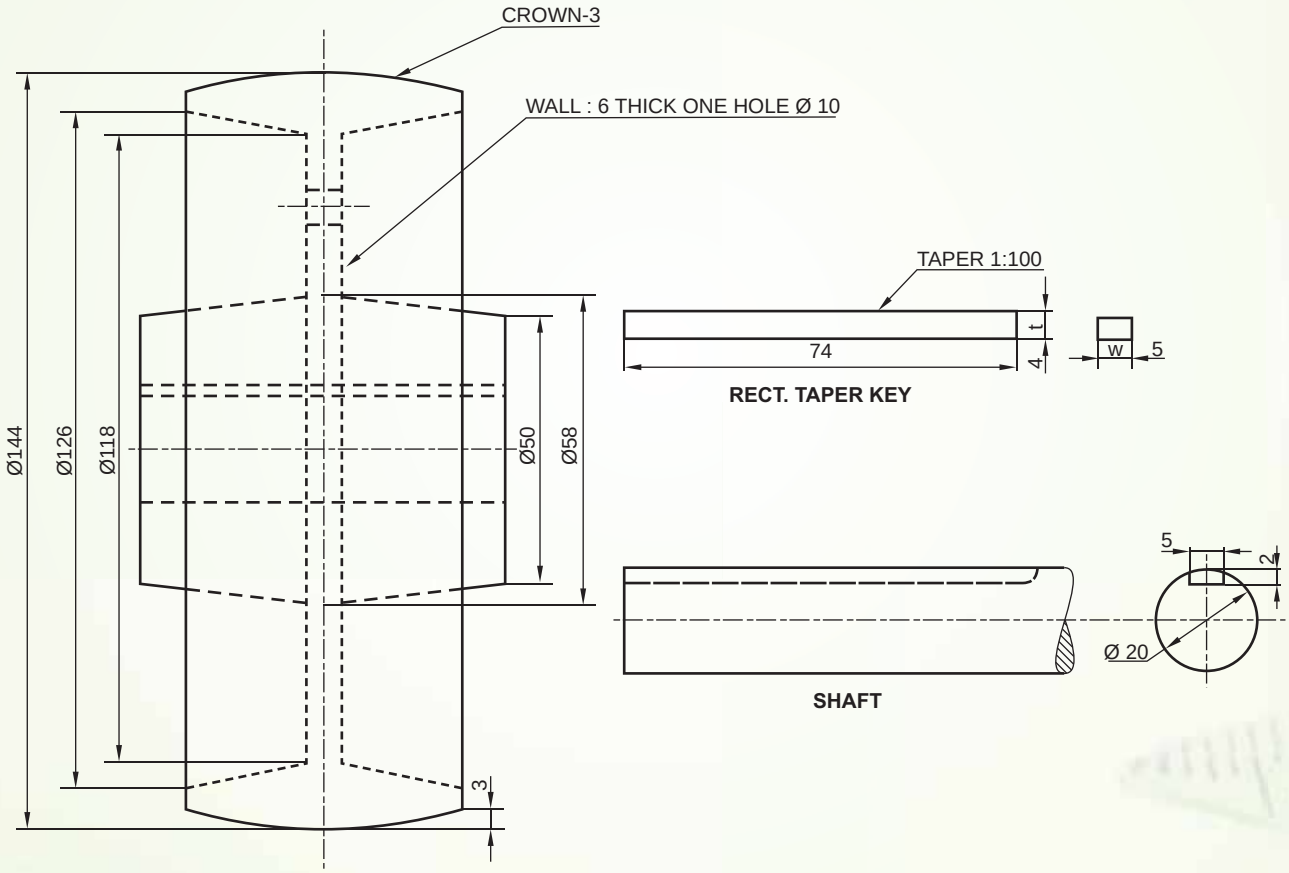

DETAILS OF A SOLID CAST IRON PULLEY

Fig 7.5

Solution :

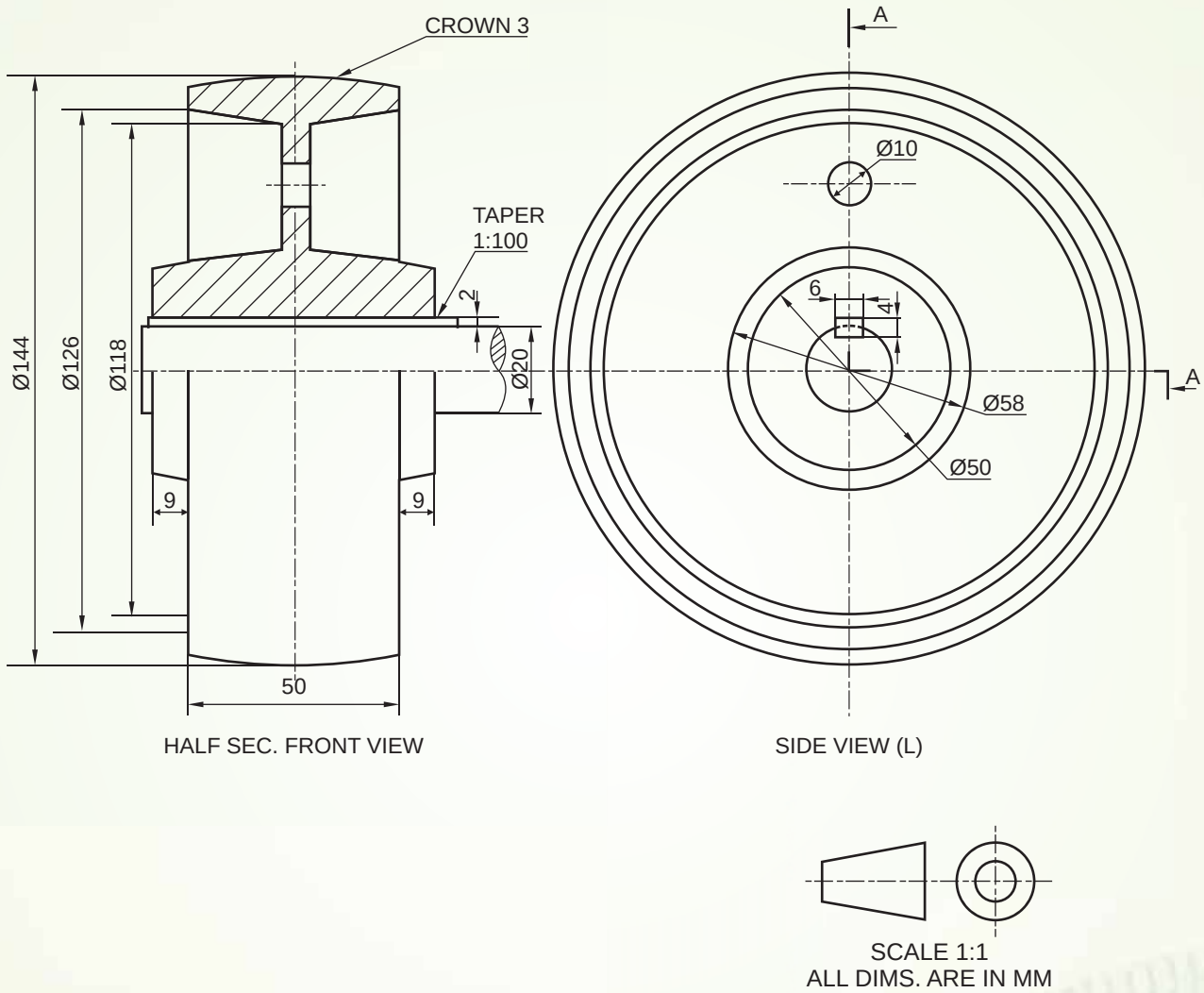

SOLID C.I. PULLEY

Fig 7.6

Exercise 1 :

The pictorial view of a Solid Web Cast Iron Pulley has been shown in Fig 7.4. Draw its following Views :

1. Front View with upper half in section.
2. Side View looking from left side.

Write title and scale used. Draw projection symbol. Give '6' important dimensions.

7.3 V- BELT PULLEY:

In the V- belt pulley, there is a wedge shaped groove (V- groove) provided on the rim of pulley to carry the belt of V- shaped cross section. These are extensively used in our daily life as well as in industries due to the high efficiency in power transmission.

The endless belt of V- shape are specially made of rubber and fibre to withstand high tensile force. In general, a groove of 40° is selected. But it must be adjusted in relation to the pulley diameter. The pictorial view of a V- belt pulley with single groove is shown in Fig 7.8. Detail of the V-groove along with the section are also shown in the figure for better understanding of it.

V- BELT PULLEY
Fig 7.7

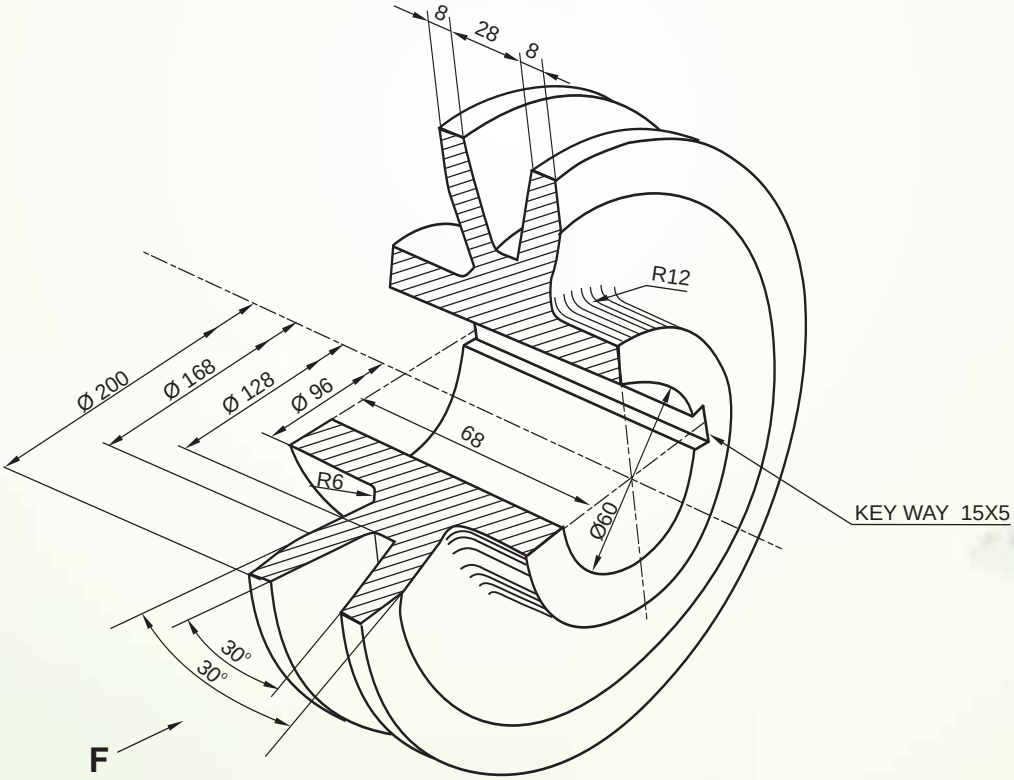

SINGLE GROOVE V-BELT PULLEY
Fig 7.8

Example 3 :

Draw the Front View with upper half in section and Side View looking from left side for the Assembly of pulley shown in Fig. 7.8 with shaft and key of proper size.

Write title and scale used. Draw projection symbol. Give '6' important dimensions.

Solution :

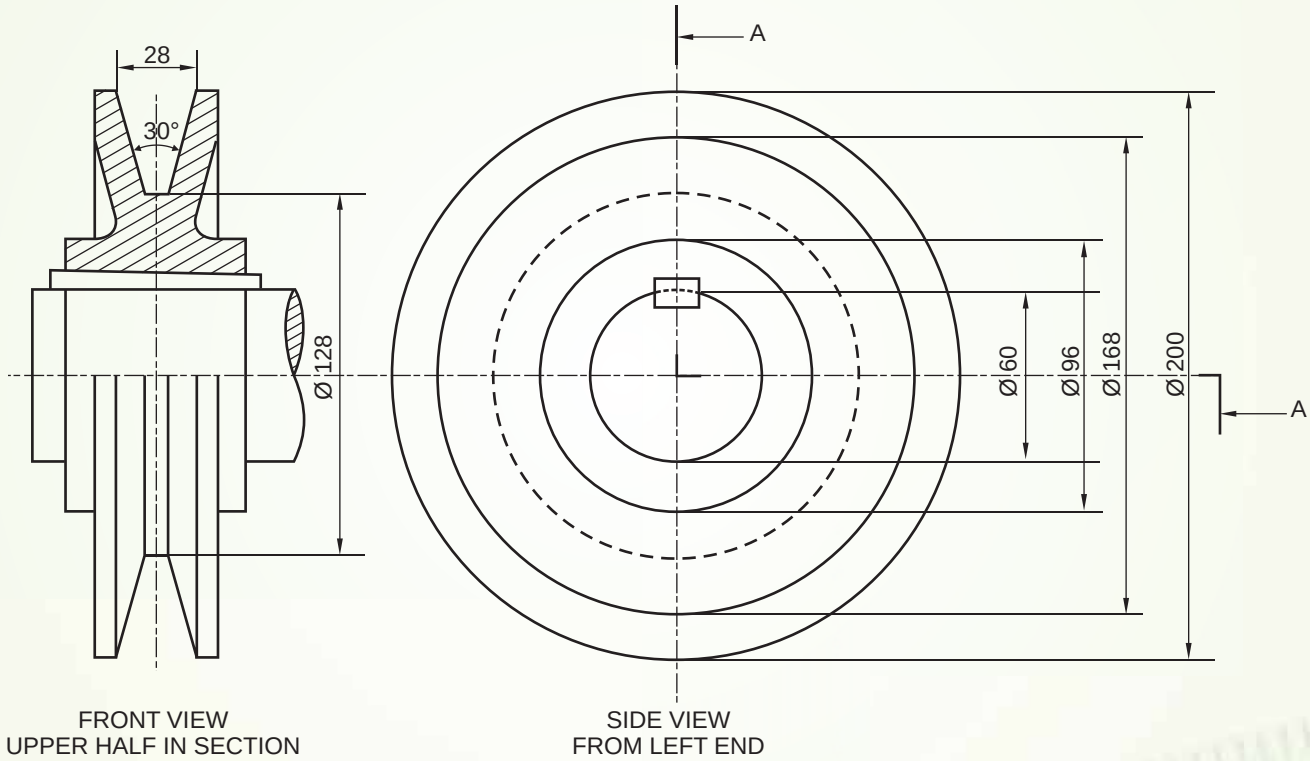

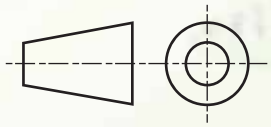

SCALE 1:2

V - BELT PULLEY

Fig 7.9

EXERCISE 4 : Fig 7.10 shows the orthographic views of a single groove V-belt pulley. Draw its following views with shaft and key of proper size :

(i) Front View, upper half in section

(ii) Side View looking from left side.

Write title and scale used. Draw projection symbol. Give '6' important dimensions.

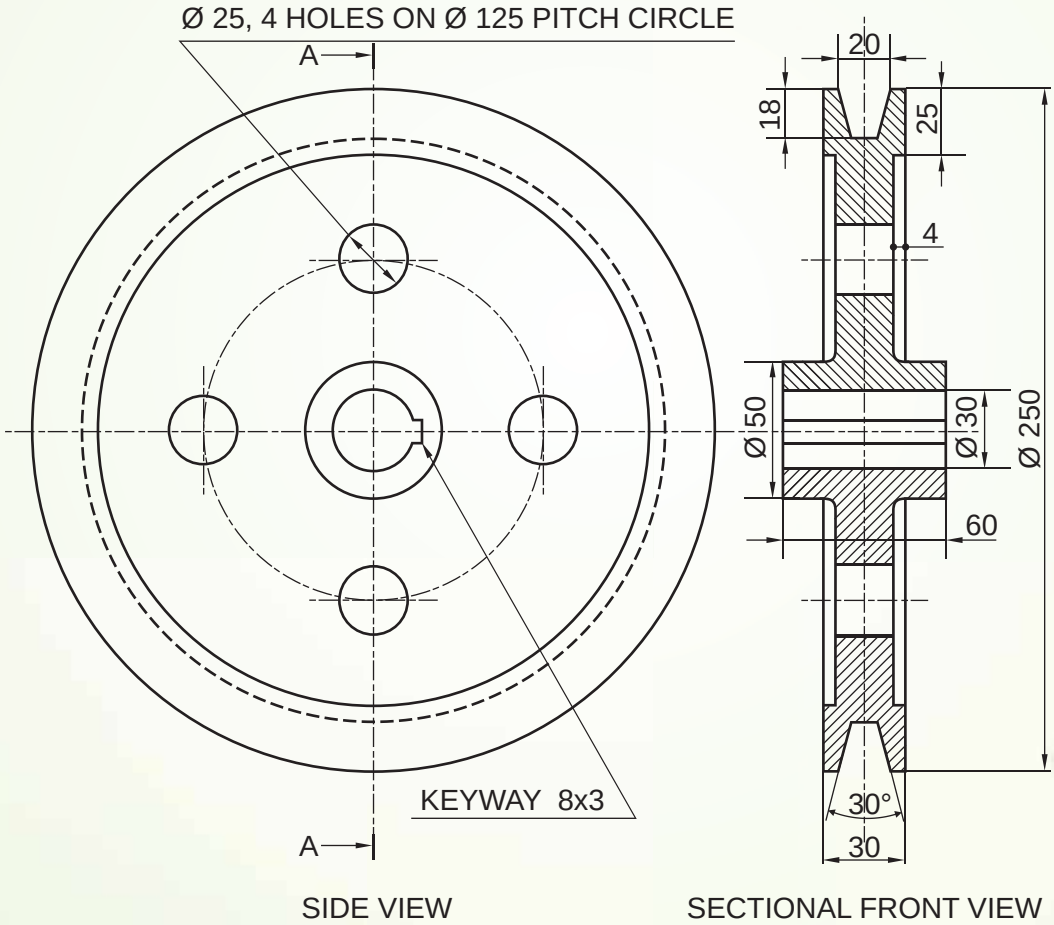

SINGLE GROOVE V - BELT PULLEY

Fig 7.10

CBSE
CONTINUOUS AND COMPREHENSIVE EVALUATION
KNOW - AS YOU GROW

CENTRAL BOARD OF SECONDARY EDUCATION

Shiksha Kendra, 2, Community Centre, Preet Vihar, Delhi - 110092, India
Tel.: 91-11-22509252-59 Fax : 91-11-22515826
E-mail : cbseli@nda.vsnl.net.in website : www.cbse.nic.in